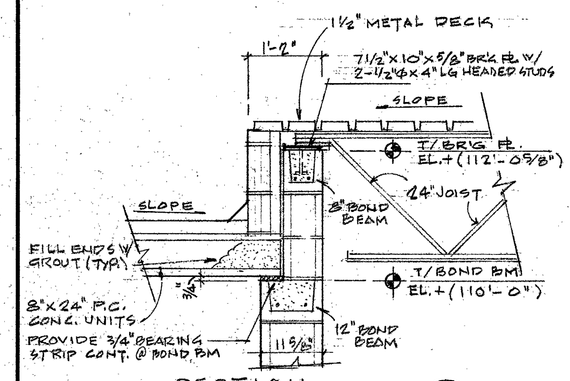

SECTION 17 / 5-3B
3/4" = 1'-0"

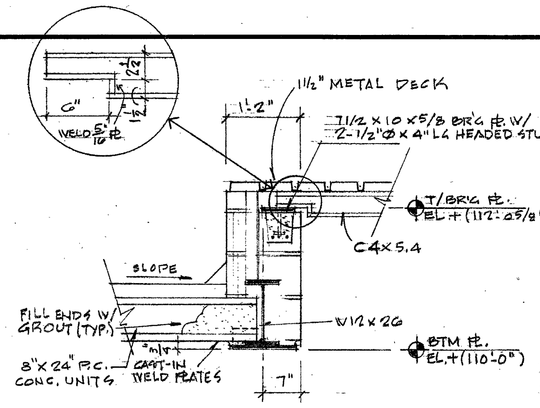

SECTION 15 / 5-3B
3/4" = 1'-0"

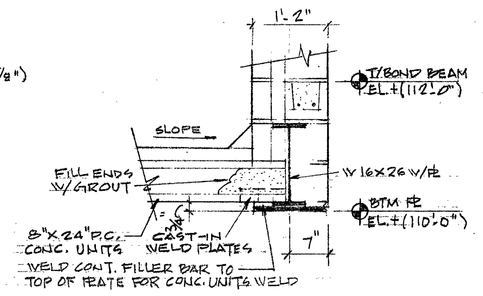

SECTION 13 / 5-3B
3/4" = 1'-0"

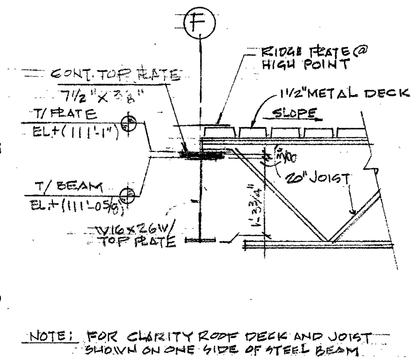

NOTE: FOR CLARITY ROOF DECK AND JOIST SHOWN ON ONE SIDE OF STEEL BEAM.

SECTION 8 / 5-3B
3/4" = 1'-0"

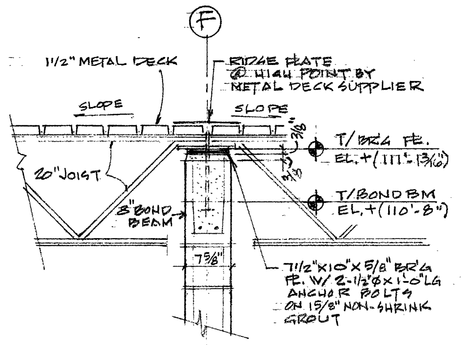

SECTION 7 / 5-3B
3/4" = 1'-0"

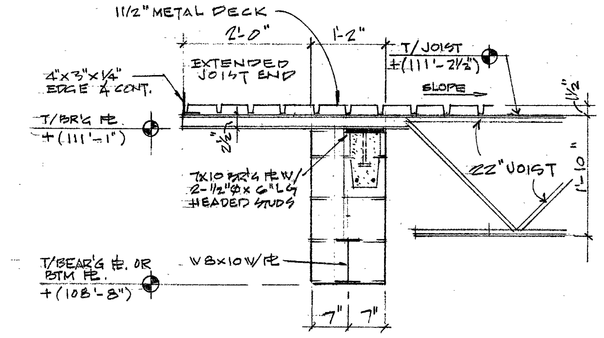

SECTION 1 / 5-3B
3/4" = 1'-0"

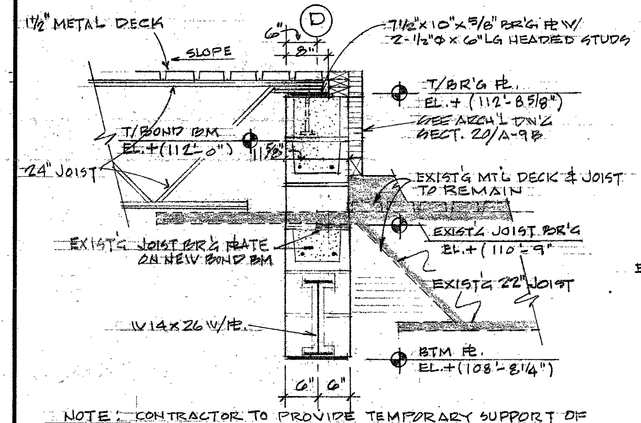

NOTE: CONTRACTOR TO PROVIDE TEMPORARY SUPPORT OF EXIST'G ROOF CONST. BEFORE REMOVING EXIST'G WALL, OVERHANG, LINTELS AND ETC.

SECTION 16 / 5-3B
3/4" = 1'-0"

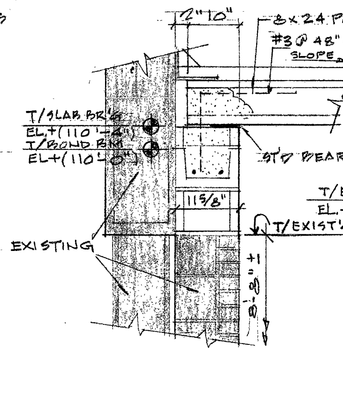

SECTION 16 / 5-3B
3/4" = 1'-0"

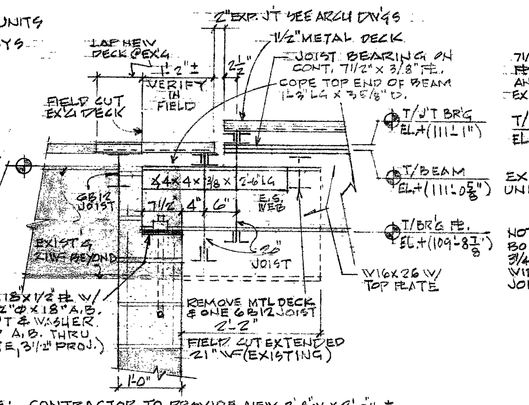

NOTE: CONTRACTOR TO PROVIDE NEW 2'-8"W. x 2'-0"H. ± MAS. POCKET IN EXIST'G MAS. WALL BUILD AS SHOWN FOR NEW BEAM & AT NEW BEAR'G PLATE FILL CORES SOLID W/ CONC. TWO COURSES.

SECTION 14 / 5-3B
3/4" = 1'-0"

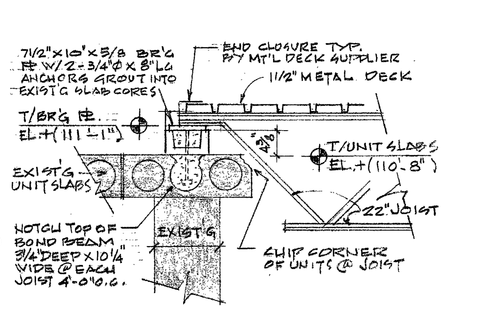

SECTION 10 / 5-3B
3/4" = 1'-0"

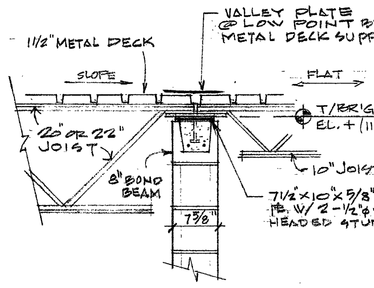

SECTION 9 / 5-3B
3/4" = 1'-0"

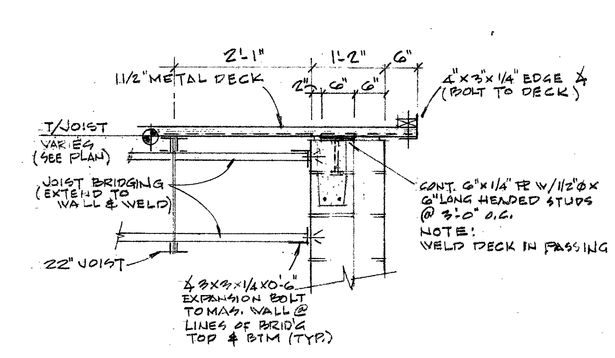

SECTION 2 / 5-3B
3/4" = 1'-0"

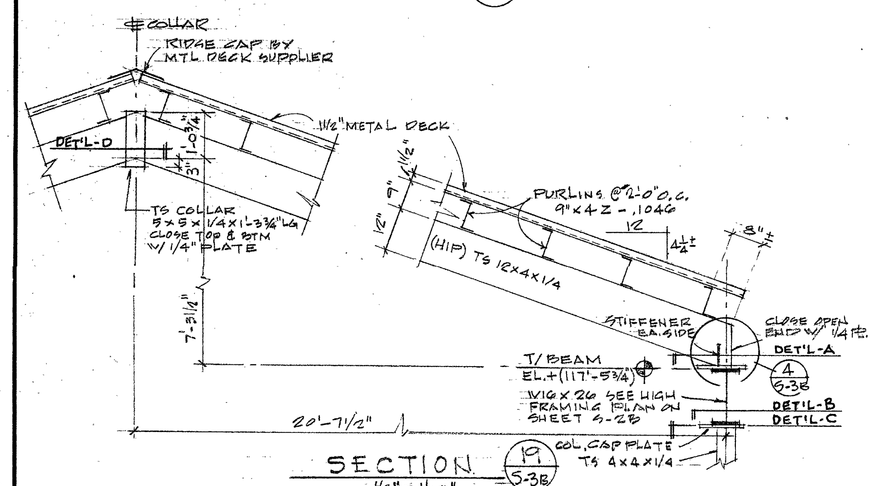

SECTION 19 / 5-3B
1½" = 1'-0"

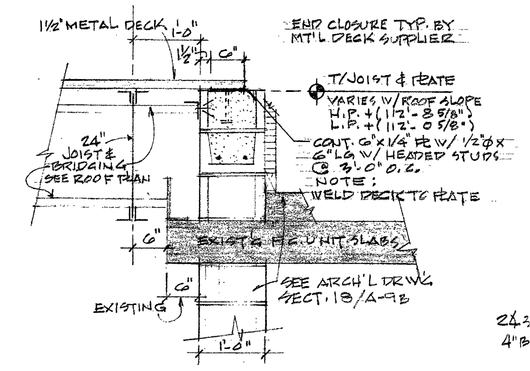

SECTION 12 / 5-3B
3/4" = 1'-0"

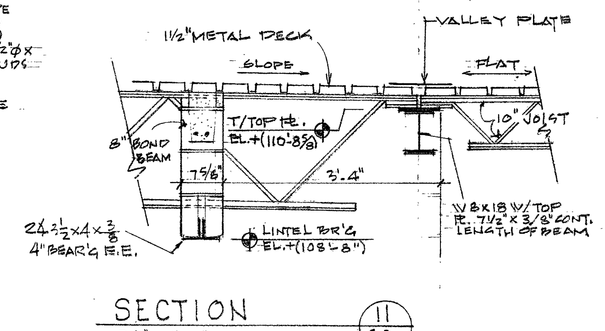

SECTION 11 / 5-3B
3/4" = 1'-0"

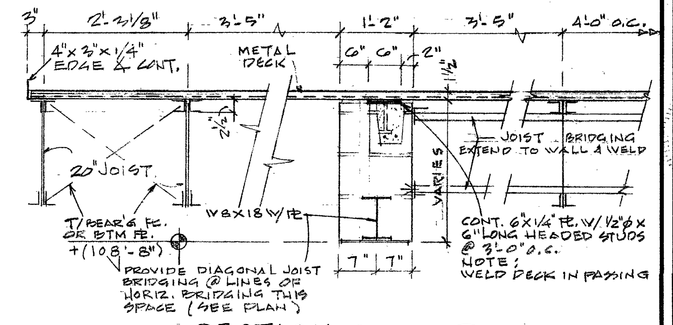

SECTION 3 / 5-3B
3/4" = 1'-0"

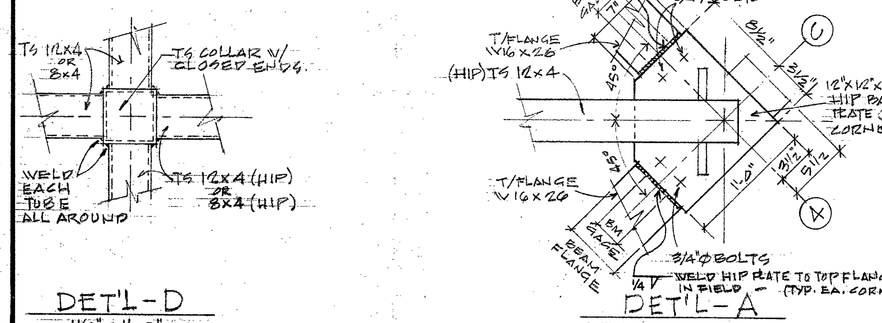

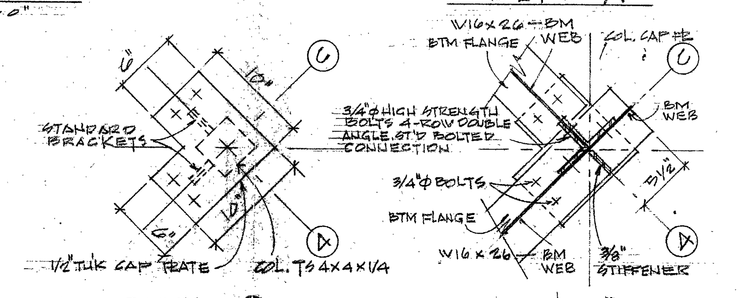

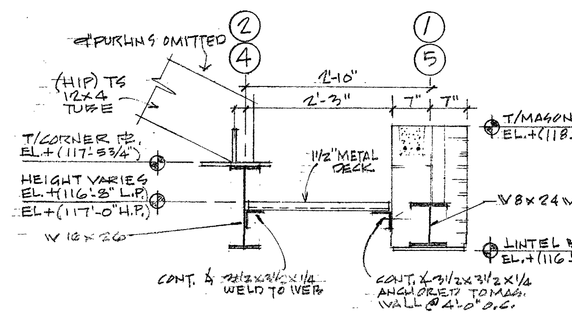

SECTION 23 / 5-3B
3/4" = 1'-0"
ALSO REFER TO ARCH'L SECTION 24/A10B

GENERAL FRAMING NOTES

1. Metal deck manufacturer shall provide 20 gauge seat and closure pieces to close all ends of runs of ribs of 1½", 20 gauge metal deck. Refer to Spec. Section 05300.
2. Metal roof deck shall be 1½" Type "P" 22 gauge, galvanized.
3. Metal deck manufacturer shall provide 6", 20 gauge cover plates at all deck splices and at all points where the roof deck changes direction, hips, etc..
4. Metal deck manufacturer shall provide recessed sump pans to accommodate roof drains in all metal roof decks.
5. Deck shall be provided in minimum 3-span lengths where possible.
6. All bolted connections, unless noted otherwise, shall be with 3/4" diameter high strength bolts.
7. All structural steel shapes, bars and plates shall conform to the standard specification for structural steel ASTM-36. All structural tube columns to be ASTM A501 for 36 KSI.
8. Structural steel fabricator shall provide seat angles for joists bearing onto columns where indicated on the drawings.
9. Structural steel fabricator shall provide steel fillers on beam flanges where required for the bearing of metal deck or metal centering.
10. All beams shall bear 8" on masonry walls unless otherwise noted on plan. Fill cores solid with concrete two top courses at beam bearing unless otherwise noted.
11. All joists shall be manufactured, installed, bridged and anchored in accordance with the currant specifications of the Steel Joist Institute. Provide joist extensions as shown. Refer to Spec. Section 05200.
12. Beam, deck and slab elevations are referenced to nominal first floor line elevation.
13. All steel columns enclosed in masonry walls shall be wrapped with 1/2" fiberglass insulation.
14. All structural steel shall be designed fabricated and erected in accordance with the specifications for the "Design, Fabrication and Erection of Structural Steel Buildings", "American Institute of Steel Construction" and current supplements. See Spec. Section 05100.
15. Reinforcing bars shall meet ASTM A-615 grade 40 deformed bars.
16. Temporary bracing shall be installed as necessary to maintain stability and alignment until entire system is erected and permanently set.
17. Roof design load - 60 P.S.F. total.
18. Pre-cast hollow core slab units shall be provided with weld plate inserts (6 x 6 x 1/4 typical) for attachment to all steel support beams with field welds. Where units bear on concrete or concrete block provide bearing strips and #3 bars bent into slab keys 4'-0" o.c.. Refer to Spec. Section 03500.
19. Provide 3/4" of non-shrink grout under all column bearing plates.
20. The General Contractor shall verify the location and size of all required roof and floor openings. Coordinate all openings with Mechanical Contractor. Refer to Mechanical and Architectural Details and provide reinforcing at all openings as required.

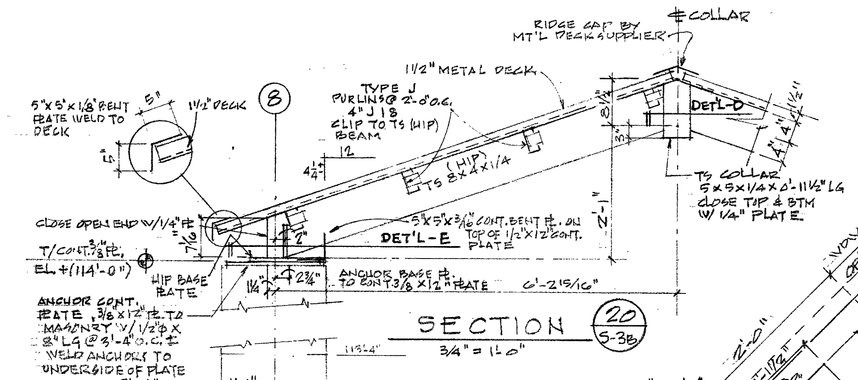

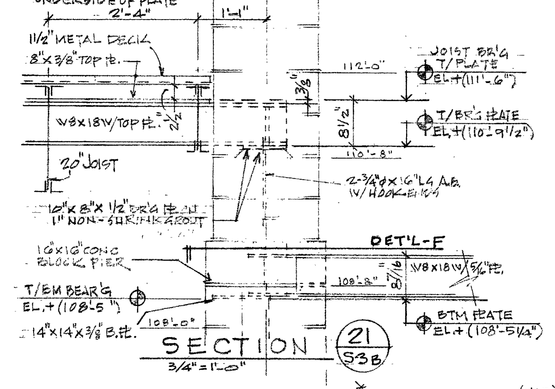

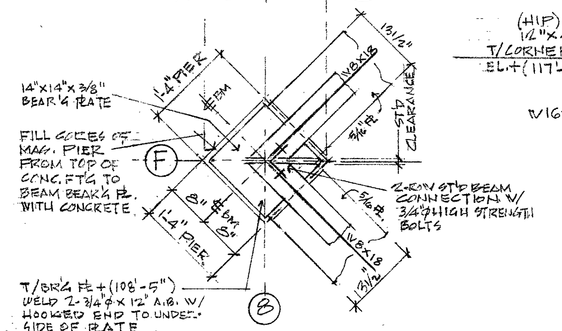

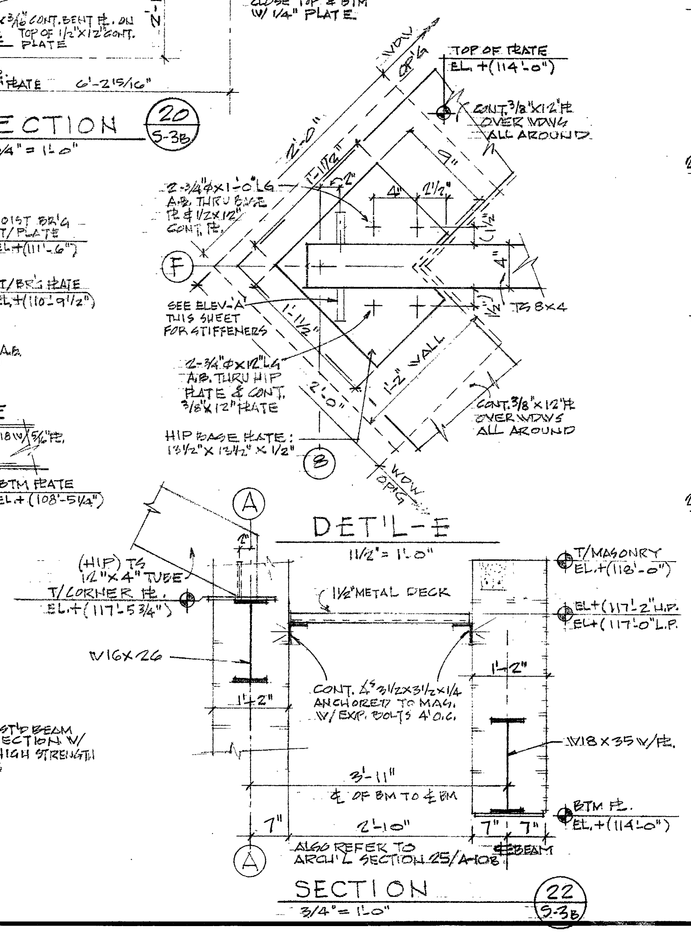

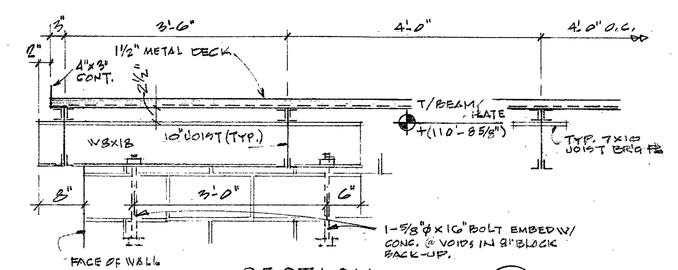

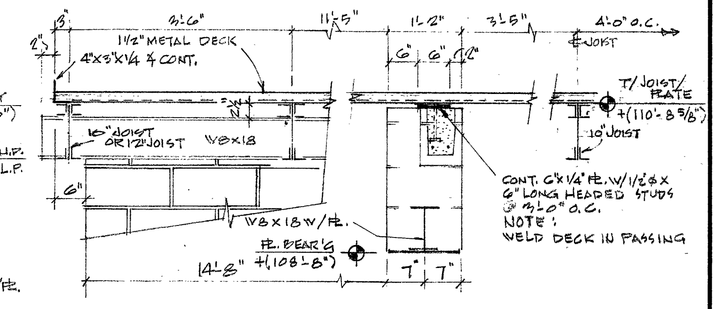

REVISIONS	BY

STRUCTURAL DETAILS
1994 BUILDING ADDITIONS & RENOVATION PROJECTS
DUNELAND SCHOOL CORPORATION
CHESTERTON, INDIANA
gerometta & kinel architects, inc.
chesterton, indiana

DATE	3/17/94
SCALE	AS NOTED
DRAWN	RPK
JOB	9315
SHEET	S-3B
OF	SHEETS

94-2-03

DATAPRINT CORP. 700 BIG CLEARFORT ST. SAN MATEO, CA 94403

STOCKDRAFTING FORM NO. 101-56