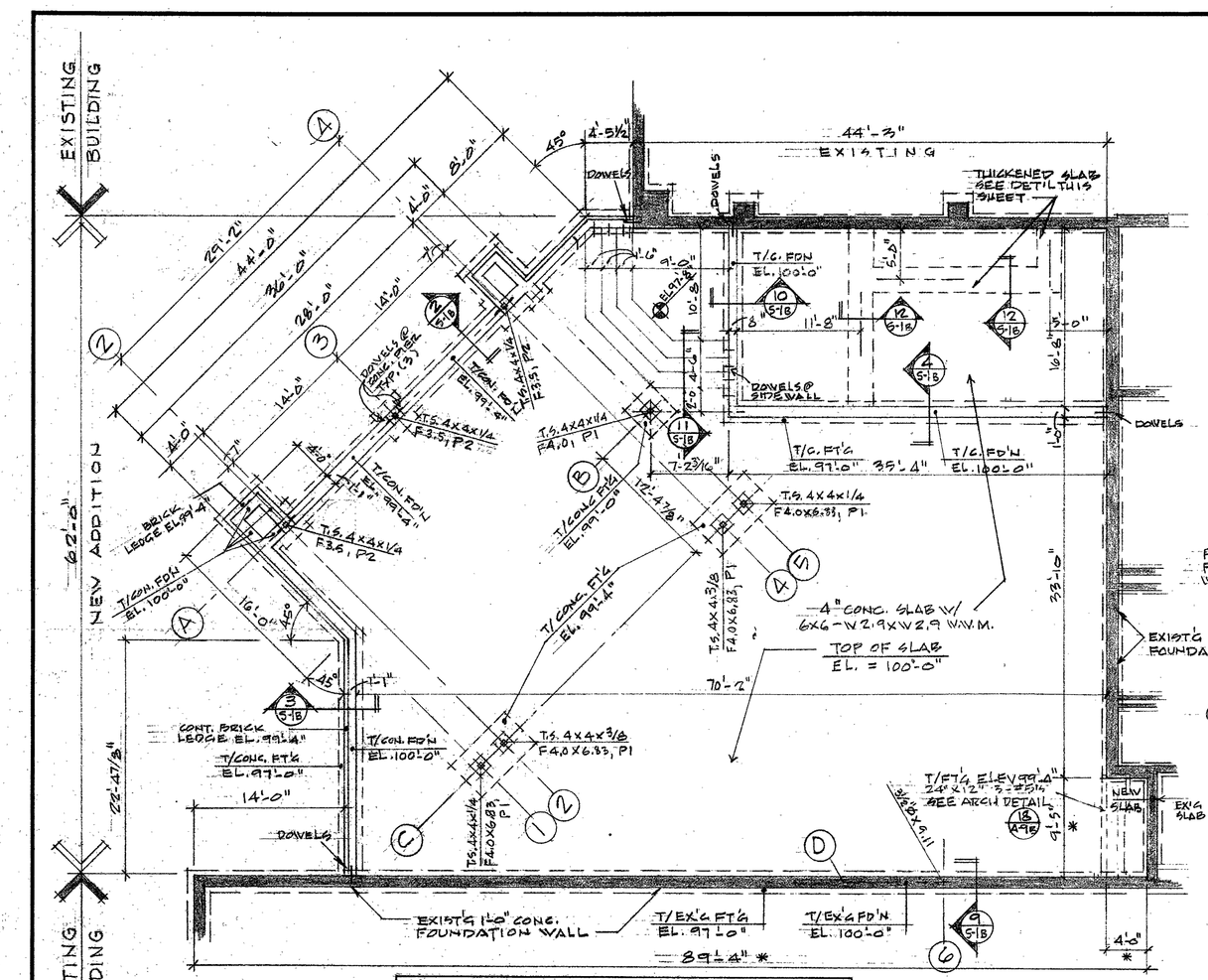

UNIT "B" FOUNDATION PLAN

1/8" = 1'-0"

SHADING INDICATES EXIST'G FOUNDATION WALLS

CONTRACTOR'S OPTION
STD. WEIGHT CONC. BLOCK W/HORIZONTAL REINF. @ 16" O.C. VERT. MAY BE USED IN LIEU OF REINF. CONCRETE FOR FOUNDATION WALLS BELOW NEW MASONRY WALLS. #5 VERT. BARS SHOWN TO REMAIN.
ALL PIERS FOR COLUMNS SHALL BE REINF. CONC. AS SHOWN.
ALL MASONRY PIERS SHALL BE GROUTED SOLID & REINF. DOWN TO FTG.

COLUMN FOOTING SCHEDULE

MARK	SIZE	REINFORCING	ELEVATION TOP OF FOOT'G	REMARKS
F3.5	3'-6 x 3'-6 x 1'-0	4-#4's EA. WAY	97'-0"	
F4.0	4'-0 x 4'-0 x 1'-0	5-#4's EA. WAY	99'-0"	
F4.5	4'-6 x 4'-6 x 1'-0	7-#4's EA. WAY	99'-4"	
F4.0 x 6.33	4'-0 x 6'-4 x 1'-0	5-#6 LONG WAY 8-#6 SHORT WAY	99'-4"	COMBINED FOOTING
F2.0 x 3.67	2'-0 x 3'-8 x 1'-0	3-#5 LONG WAY 5-#5 SHORT WAY	97'-0"	C. PIER FOOTING

INTERIOR LINTELS

PROVIDE STEEL ANGLE LINTELS OVER ALL INTERIOR DOORS & BORROWED LITE OPENINGS IN MASONRY WALLS.
PROVIDE 2X 3'-3 1/2" x 5 x 5/16" WELD BACK TO BACK
MINIMUM BEARING EA. END 4"

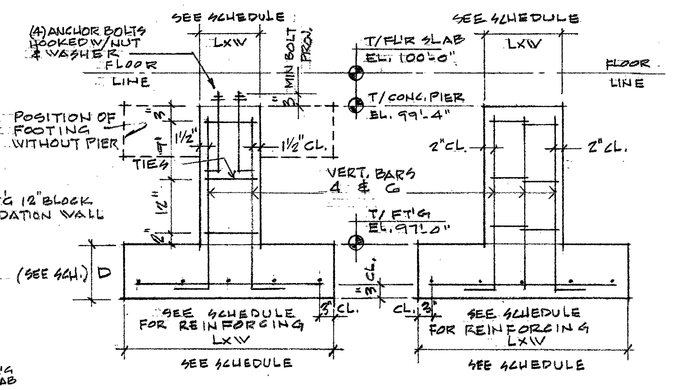

TYPICAL COL. PIER N.T.S. | TYPICAL MAS. PIER N.T.S.

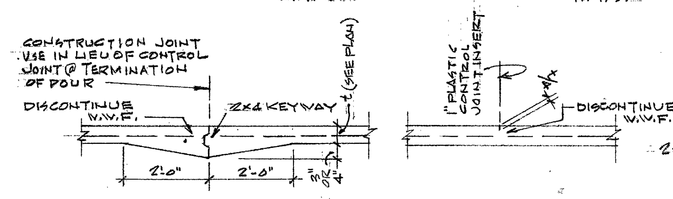

CONSTRUCTION JOINT | CONTROL JOINT N.T.S.

FLOORS SHALL BE DIVIDED INTO BLOCKS NOT MORE THAN 700 SQ FT. POUR BLOCKS ALTERNATELY SO THAT NO TWO ADJOINING BLOCKS ARE POURED THE SAME DAY.

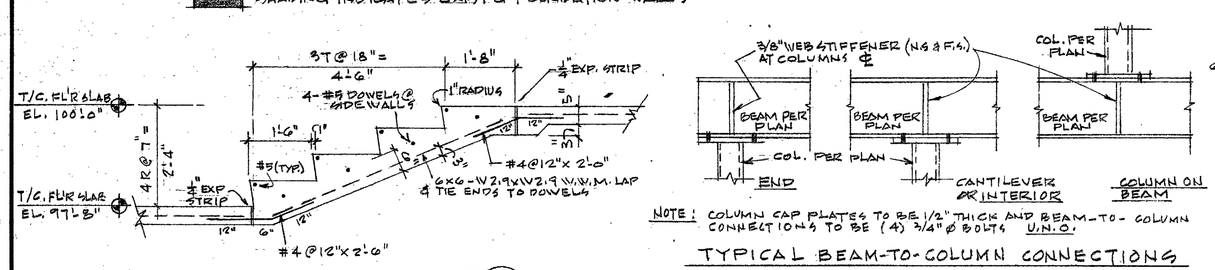

SECTION 11/S-1B 1/2" = 1'-0" | TYPICAL BEAM-TO-COLUMN CONNECTIONS N.T.S.

12/S-1B THICKENED SLAB N.T.S. | SLAB AT DEPRESSION N.T.S.

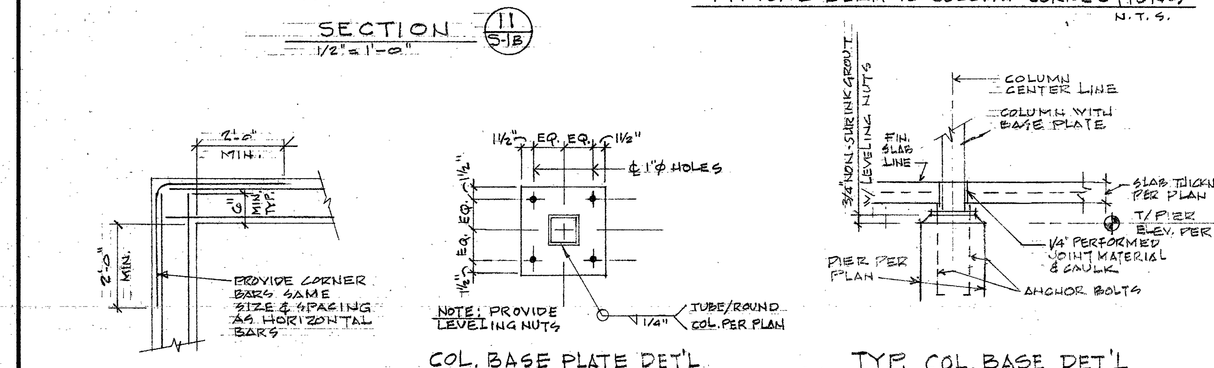

COL. BASE PLATE DET'L N.T.S. | TYP. COL. BASE DET'L N.T.S.

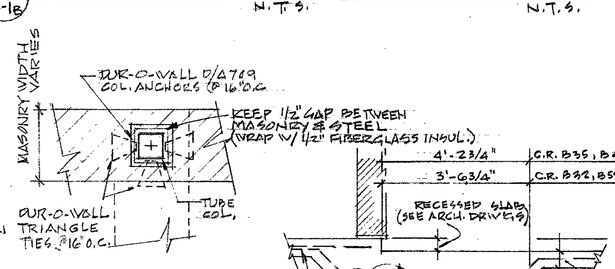

TYP. MASONRY TIE TO COLUMN N.T.S.

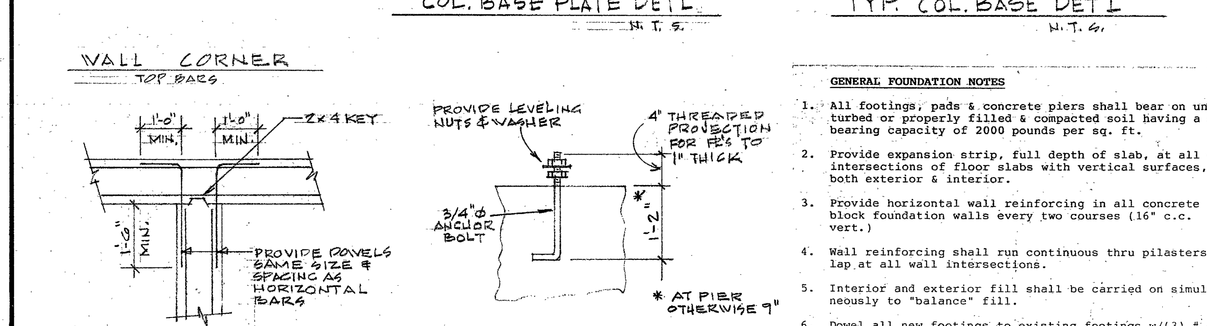

WALL INTERSECTION TOP BARS | ANCHOR BOLT DETAIL N.T.S.

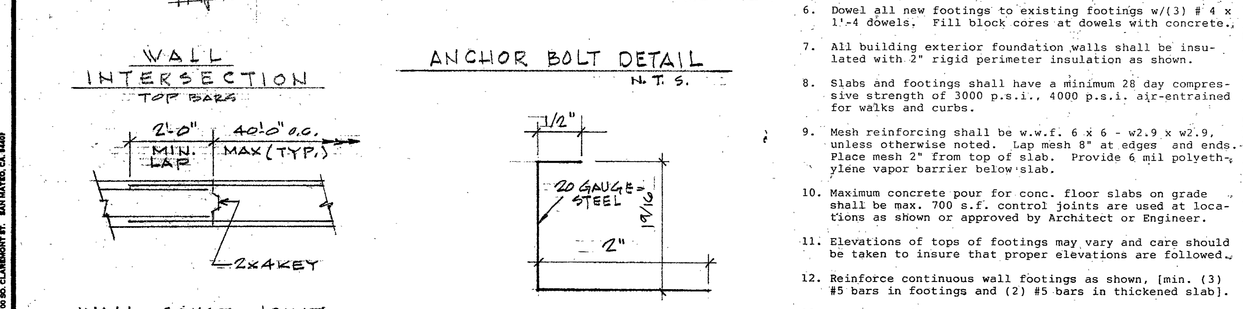

WALL CONST. JOINT TOP BARS | SEAT AND CLOSURE DETAIL N.T.S.

TYPICAL FOUNDATION WALL DETAILS N.T.S.

GENERAL FOUNDATION NOTES

1. All footings, pads & concrete piers shall bear on undisturbed or properly filled & compacted soil having a safe bearing capacity of 2000 pounds per sq. ft.
2. Provide expansion strip, full depth of slab, at all wall intersections of floor slabs with vertical surfaces, both exterior & interior.
3. Provide horizontal wall reinforcing in all concrete block foundation walls every two courses (16" c.c. vert.)
4. Wall reinforcing shall run continuous thru pilasters & lap at all wall intersections.
5. Interior and exterior fill shall be carried on simultaneously to "balance" fill.
6. Dowel all new footings to existing footings w/(3) # 4 x 1'-4 dowels. Fill block cores at dowels with concrete.
7. All building exterior foundation walls shall be insulated with 2" rigid perimeter insulation as shown.
8. Slabs and footings shall have a minimum 28 day compressive strength of 3000 p.s.i., 4000 p.s.i. air-entrained for walks and curbs.
9. Mesh reinforcing shall be w.w.f. 6 x 6 - w2.9 x w2.9, unless otherwise noted. Lap mesh 8" at edges and ends. Place mesh 2" from top of slab. Provide 6 mil polyethylene vapor barrier below slab.
10. Maximum concrete pour for conc. floor slabs on grade shall be max. 700 s.f. control joints are used at locations as shown or approved by Architect or Engineer.
11. Elevations of tops of footings may vary and care should be taken to insure that proper elevations are followed.
12. Reinforce continuous wall footings as shown, (min. (3) #5 bars in footings and (2) #5 bars in thickened slab).
13. Elevation of top of footings shall be + 97'-0" unless otherwise noted.
14. Recess floor slabs in New Bailly Corridors 3" for Base Bid Terrazzo Flooring as shown.

PIER SCHEDULE

MARK	PIER SIZE	VERT. REINF.	TIES	ANCHOR BOLTS
P-1	NO PIER			(4) 3/4" ø x 12"
P-2	1'-0" x 1'-0"	4-#6's	#4's @ 12" O.C.	(4) 3/4" ø x 18"
P-3	1'-2" x 3'-2"	6-#6's	#4's @ 12" O.C. SET OF 2	—

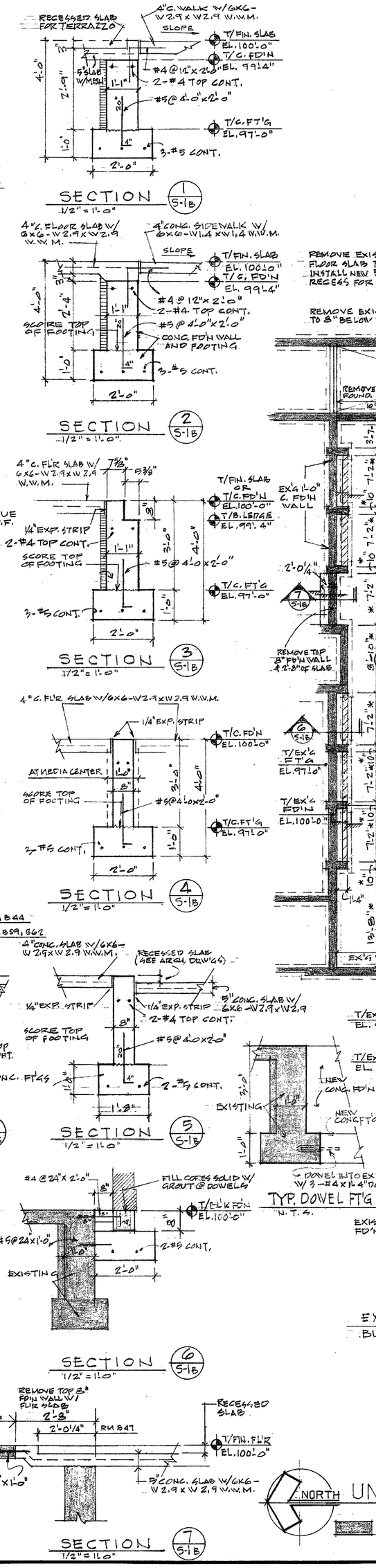

BASE PLATE SCH.

COL. NO.	COL. SIZE	PLATE SIZE
A-2 LOWER	TS 4 X 4 X 1/4	9 x 9 x 3/4
A-3		
A-4 LOWER		
B-5		9 x 9 x 3/4
C-1		9 x 9 x 7/8
C-2 LOWER		
C-4 LOWER		
C-5	TS 4 X 4 X 1/4	9 x 9 x 7/8
D-6	3 1/2 x 9.11	8 x 8 x 3/4
F-7	TS 4 X 4 X 1/4	9 x 9 x 3/4

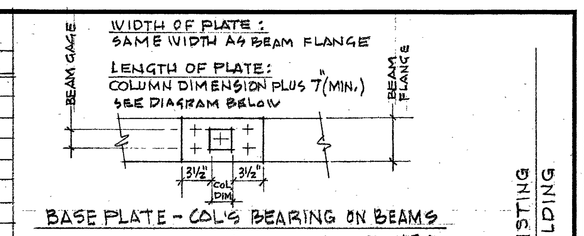

BASE PLATE - COL'S BEARING ON BEAMS N.T.S.

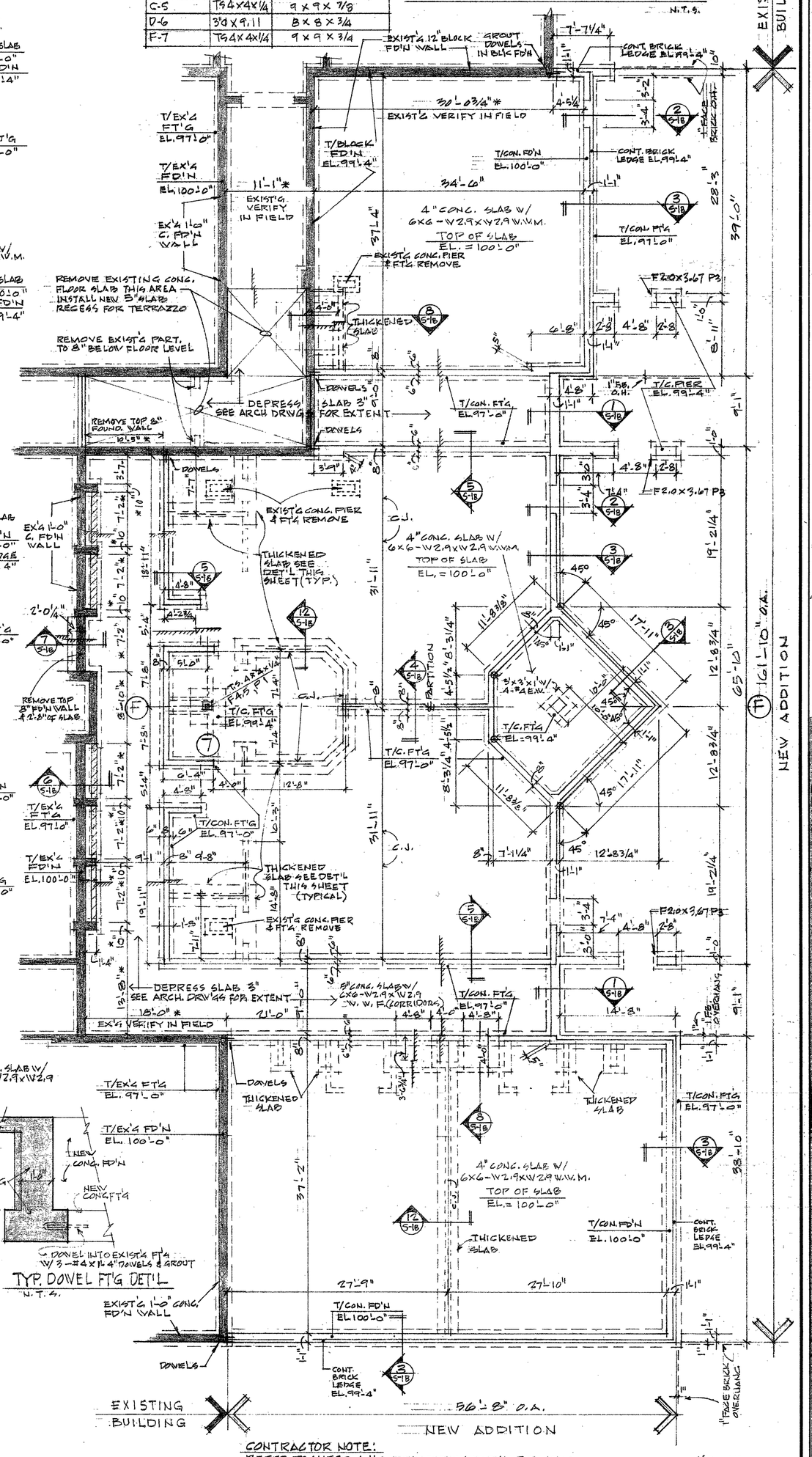

CONTRACTOR NOTE:
REFER TO SHEET A-1B FOUNDATION WORK, FOR NEW VESTIBULE 881; FOOTINGS, FOUNDATION WALL, FLOOR SLAB DETAILS AND REINFORCING; SECTIONS 28/A-1B AND 29/A-1B

* DENOTES DIMENSIONS TO BE FIELD VERIFIED
SLABS IN CORRIDORS: 5"
SLABS IN CLASSROOMS: 4"

NORTH UNIT "C" FOUNDATION PLAN 1/8" = 1'-0"

SHADING INDICATES EXIST'G FOUNDATION WALLS

REMODEL | NEW

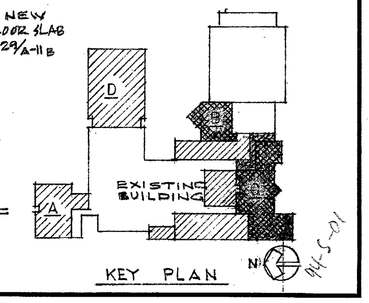

KEY PLAN

REVISIONS	BY

DAVID L. NOLL REGISTERED No. 2625 STATE OF INDIANA

RUDOLPH / BETTINI ARCHITECTS REGISTERED No. 2625 STATE OF INDIANA

UNIT B & C FOUNDATION PLANS, DTLS. & SCHED.
1994 BUILDING ADDITIONS & RENOVATION PROJECTS
DUNELAND SCHOOL CORPORATION
CHESTERTON, INDIANA
geronemus & kinel architects, inc.

DATE	3/17/94
SCALE	AS NOTED
DRAWN	RPK
JOB	9315
SHEET	S-1B
OF	SHEETS

20

STOCKDRAFTING FORM NO. 101-56