M/E DESIGN SERVICES
MECHANICAL/ELECTRICAL CONSULTING ENGINEERS
112 1/2 Lincolnway East
Mishawaka, Indiana 46544
(219) 256-1914

REVISIONS	BY

NOTES:
1. TRAP REFRIG. SUCTION LINES AT BASE OF RISERS & ADDITIONALLY AS REQ'D. FOR PROPER OIL RETURN.
2. ONE CIRCUIT SHOWN. ADDITIONAL CIRCUITS TO BE PIPED IDENTICALLY TO THIS CIRCUIT.

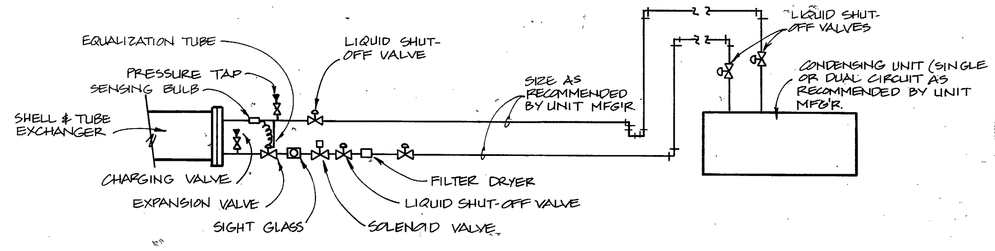

TYPICAL REFRIGERANT CIRCUIT VALVING DIAGRAM
N.T.S.

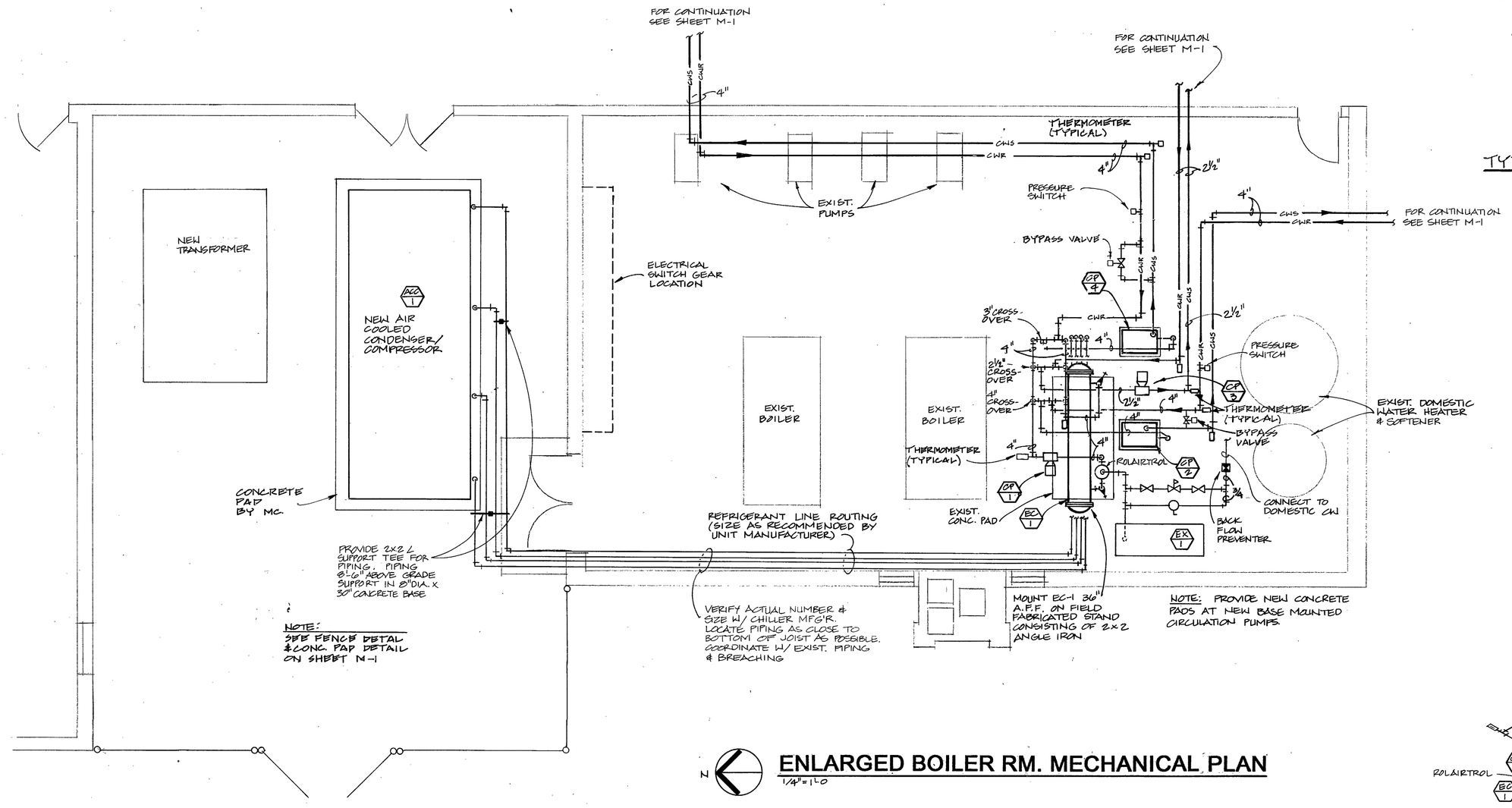

N
ENLARGED BOILER RM. MECHANICAL PLAN
1/4" = 1'-0

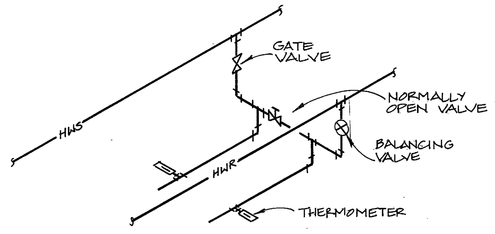

TYPICAL CROSS-OVER VALVING ARRANGEMENT
N.T.S.

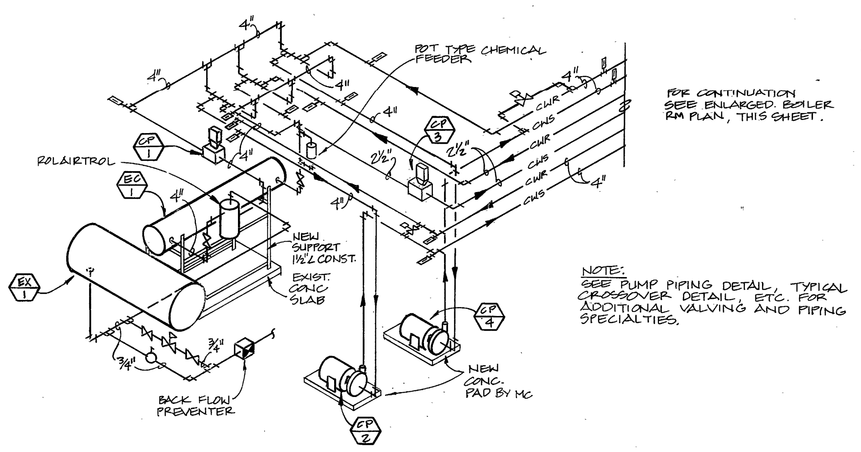

BOILER RM. EQUIPMENT SCHEMATIC
N.T.S.

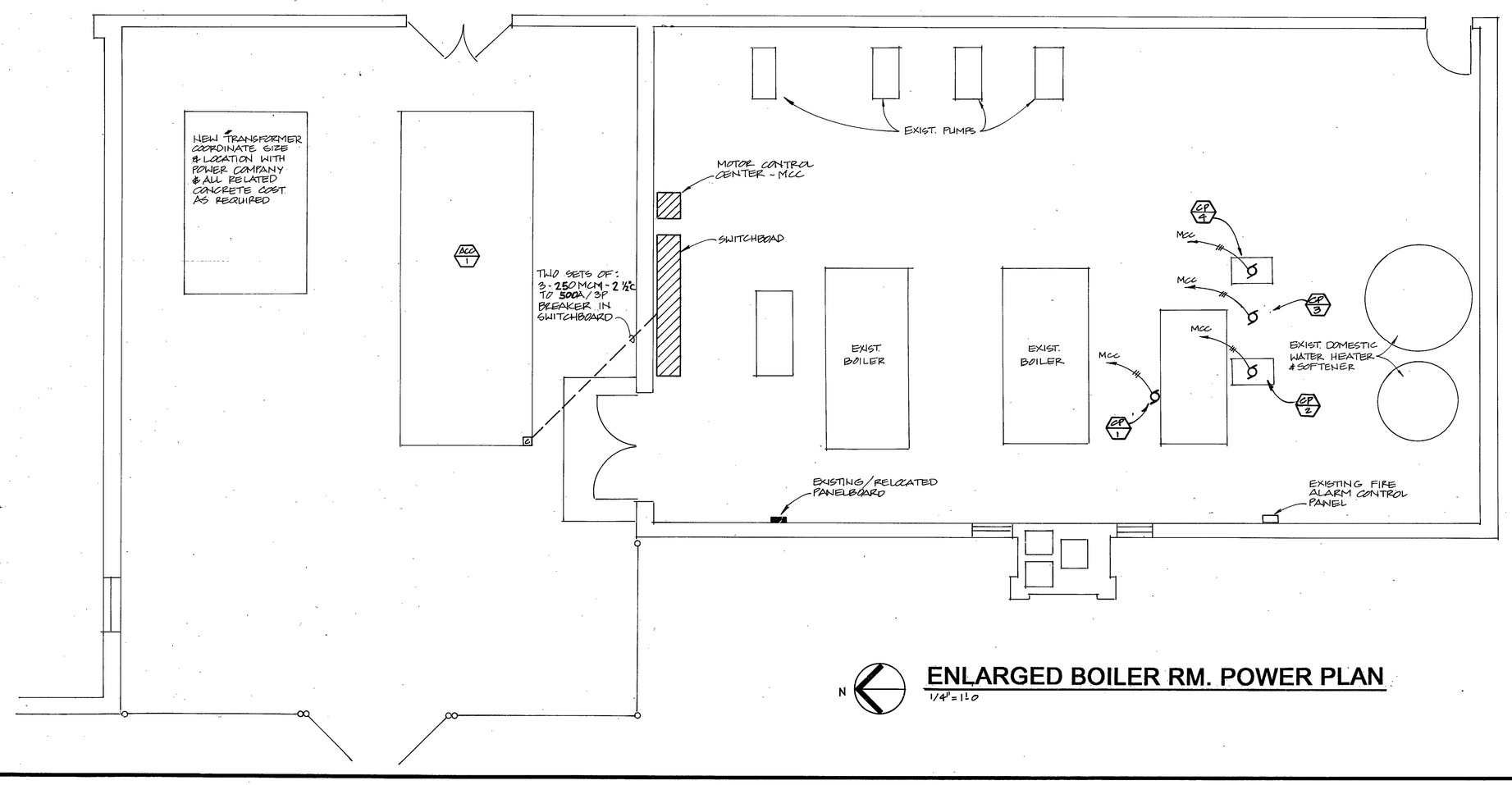

N
ENLARGED BOILER RM. POWER PLAN
1/4" = 1'-0

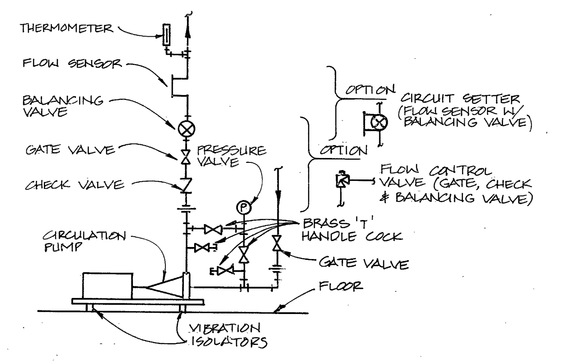

TYPICAL BASE MOUNTED CIRCULATION PUMP DETAIL
N.T.S.

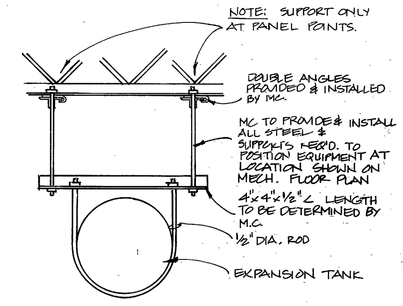

EXPANSION TANK HANGER DETAIL
N.T.S.

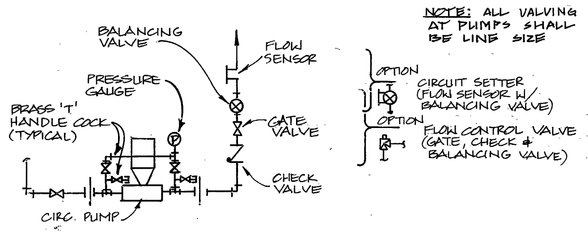

NOTE: ALL VALVING AT PUMPS SHALL BE LINE SIZE

TYPICAL IN-LINE CIRC. PUMP DETAIL
N.T.S.

ENLARGED MECH. & ELEC. BOILER RM. PLANS
1994 BUILDING ADDITIONS & RENOVATION PROJECTS
DUNELAND SCHOOL CORPORATION
chesterton, indiana
geromette & kinel architects, inc.

DATE	3-17-94
SCALE	AS SHOWN
DRAWN	KSK
JOB	9315
SHEET	ME-2
OF 41	SHEETS

25

STOCKDRAFTING FORM NO. 101-06