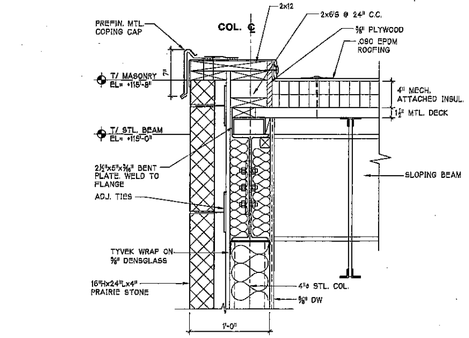

C A4.1 END WALL DETAIL
1 1/2" = 1'-0"

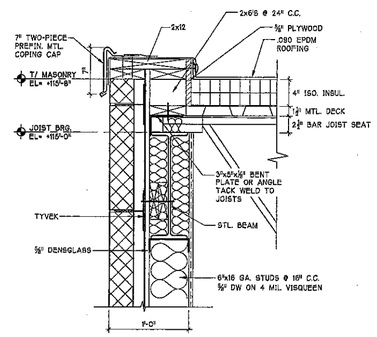

B A4.1 TYP. COPING CAP DTL.
1 1/2" = 1'-0"

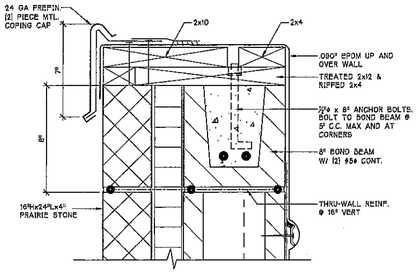

A A4.1 COPING CAP DTL.
3" = 1'-0"

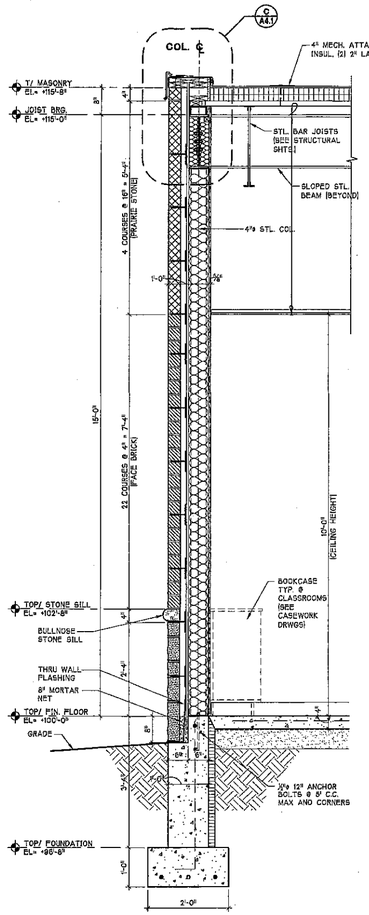

1 A4.1 TYP. WALL SECTION
(@ END WALL) 3/4"=1'-0"

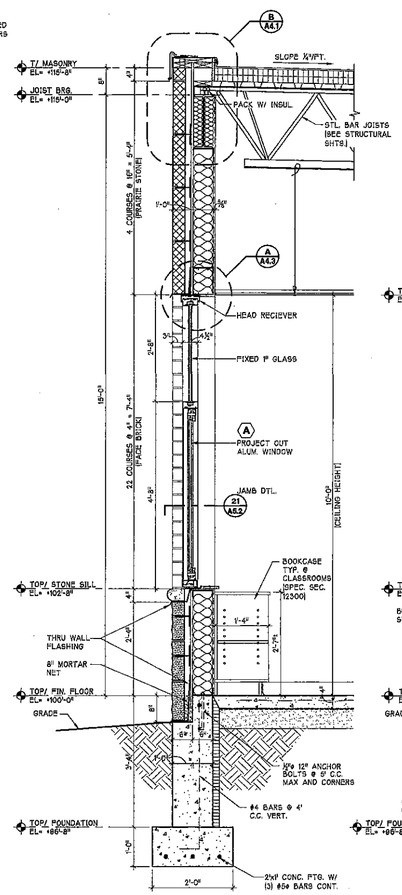

2 A4.1 TYP. WALL SECTION
(@ 7'-4" WINDOW OPENING) 3/4"=1'-0"

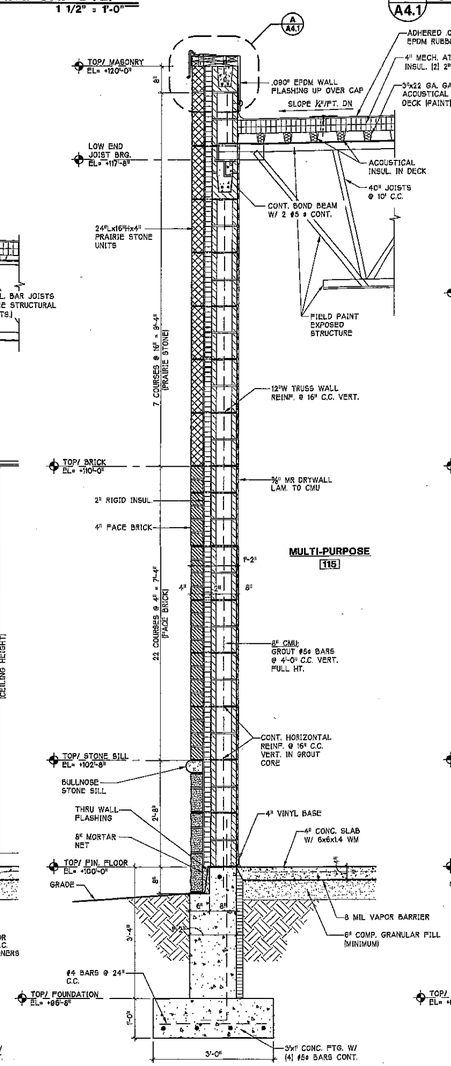

3 A4.1 WALL SECTION
(@ MULTI-PURPOSE RM 115) 3/4"=1'-0"

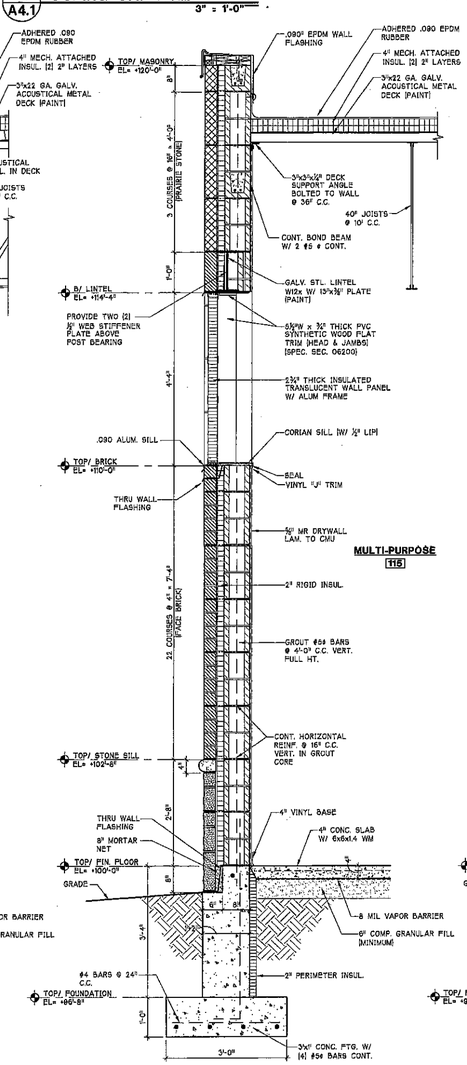

4 A4.1 WALL SECTION
(@ MULTI-PURPOSE RM 115) 3/4"=1'-0"

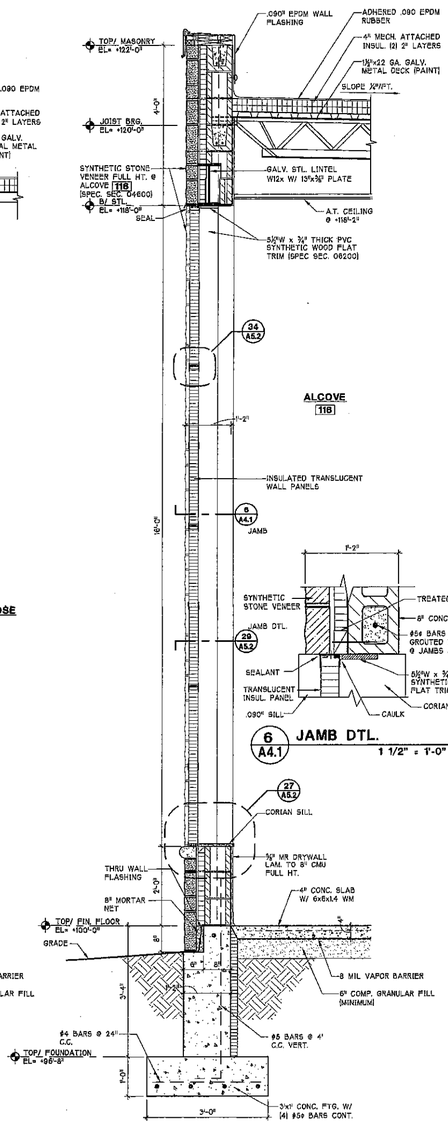

6 A4.1 JAMB DTL.
1 1/2" = 1'-0"

5 A4.1 WALL SECTION
(@ MULTI-PURPOSE ALCOVE RM 116) 3/4"=1'-0"

REVISIONS	BY

WALL SECTIONS

LIBERTY ELEMENTARY SCHOOL
EARLY LEARNING CENTER ADDITION & RENOVATION
50-1 W. COUNTY ROAD 900 N. CHESTERTON, INDIANA
geometta & kinel architects, inc.
chesterton, indiana

DATE	9-24-09
SCALE	AS NOTED
DRAWN	
JOB	2014
SHEET	A4.1
OF 62 SHEETS	