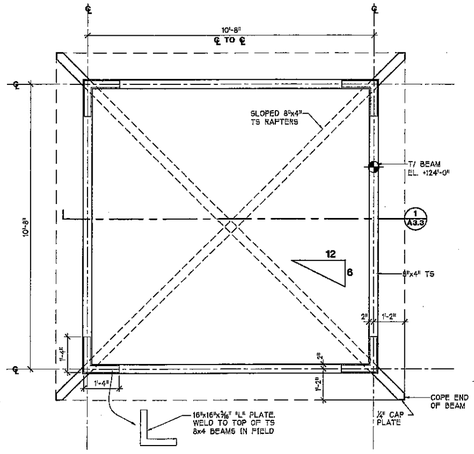

PLAN OF STEEL @ TOP OF CUPOLA
(2 REQUIRED)
1/2" = 1'-0"

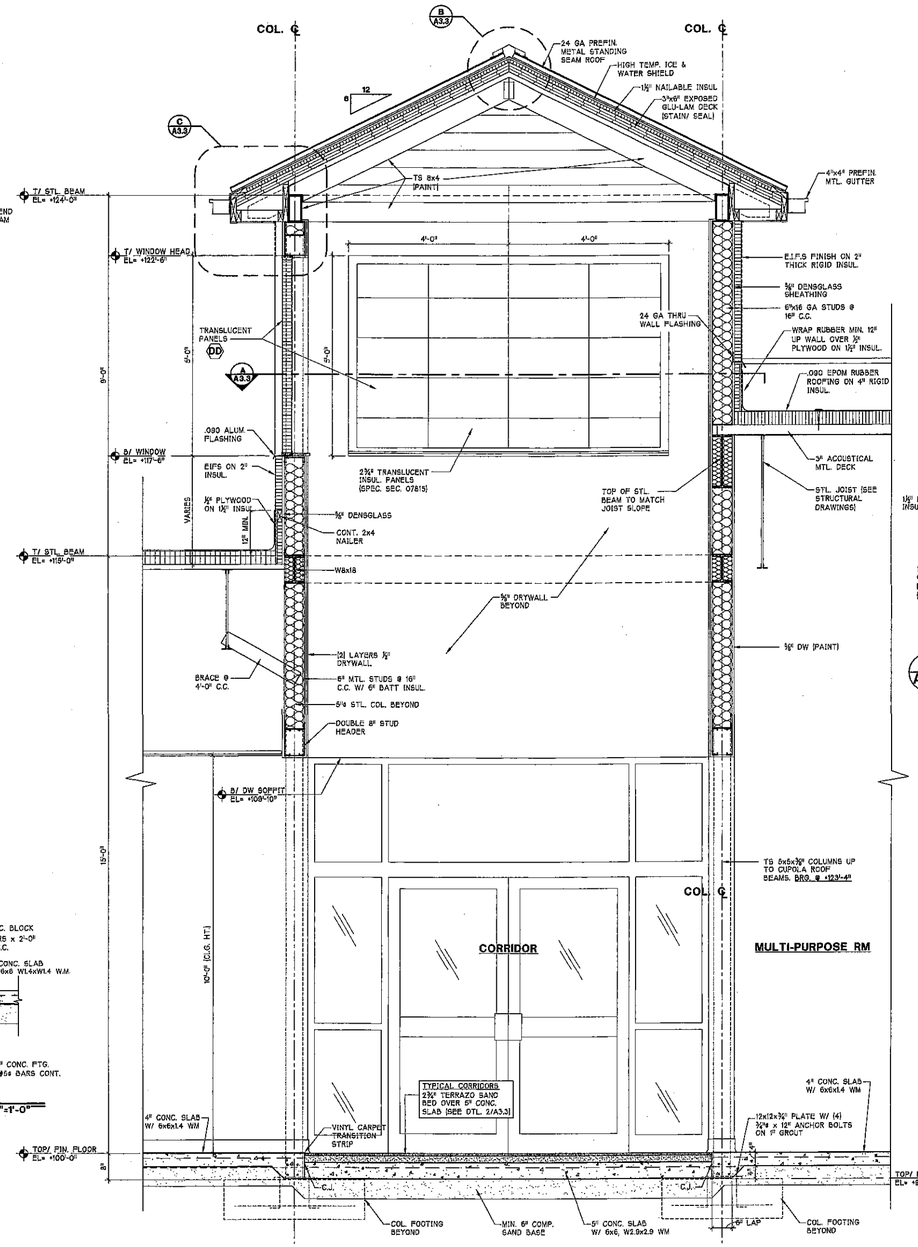

1 A3.3 CUPOLA TOWER SECTION
3/4"=1'-0"

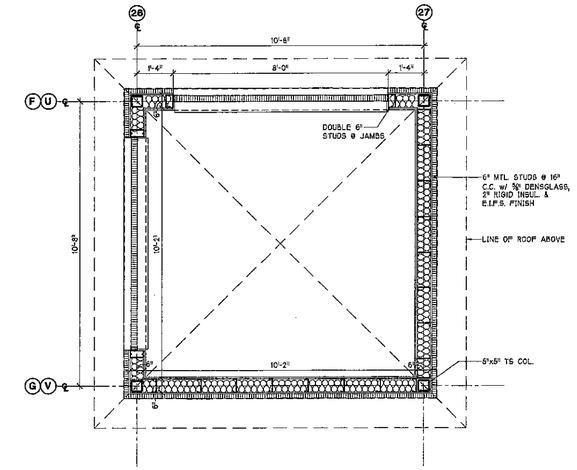

A A3.3 CUPOLA PLAN
1/2" = 1'-0"

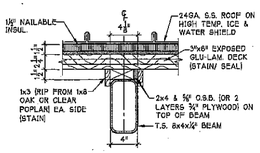

D A3.3 FASCIA DETAIL
1/2" = 1'-0"

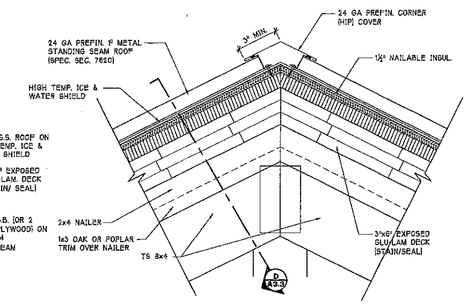

B A3.3 HIP CAP DETAIL
3" = 1'-0"

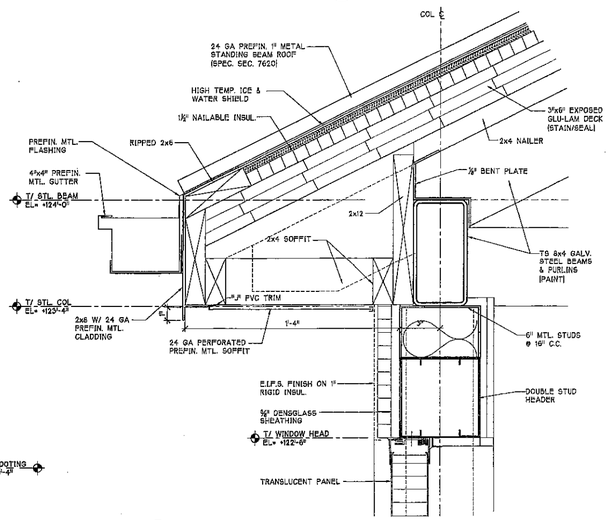

C A3.3 CUPOLA FASCIA DETAIL
3" = 1'-0"

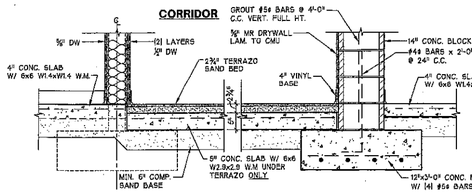

2 A3.3 CORRIDOR SECTION
3/4"=1'-0"

REVISIONS	BY

LIBERTY ELEMENTARY SCHOOL
EARLY LEARNING CENTER ADDITION & REMODEL
50-1 W. COUNTY ROAD 900 N. CHESTERTON, INDIANA
chesterton, indiana

CUPOLA PLAN, SECTION & DETAILS

gerometta & kinel architects, inc.

DATE	9-24-09
SCALE	AS NOTED
DRAWN	JAV
JOB	2814
SHEET	A3.3
of 82 SHEETS	