FLOOR DRAIN AND MISCELLANEOUS SCHEDULE

MARK	MANUFACTURER/MODEL	DESCRIPTION
FD	ZURN ZN-415	CAST IRON FLOOR DRAIN W/ TYPE "S" 6" SQUARE NICKEL BRONZE STRAINER .
FD-1	ZURN ZN-415	CAST IRON FLOOR AND SHOWER DRAIN WITH TYPE "S" 8" SQUARE NICKEL BRONZE STRAINER.
FD-2	ZURN Z-551-6-Y	GALVANIZED CAST IRON FLOOR DRAIN WITH MEDIUM DUTY SLOTTED GRATE, SEDIMENT BUCKET AND ZURN Z-1000 DEEP SEAL TRAP
WH	ZURN Z-1300	ENCASED ECOLOTROL WALL HYDRANT; NON-FREEZE; ANTI-SIPHON; AUTOMATIC DRAINING
HB	CHICAGO FAUCET NO. 952	INSIDE SILL FAUCET WITH VACUUM BREAKER, 3/4" HOSE THREAD OUTLET, REMOVEABLE KEY, CHROME FINISH.
RD	ZURN ZC-100ERC	MAIN ROOF DRAIN WITH EXTENSION; ROOF SUMP RECEIVER; UNDERDECK CLAMP; CAST IRON DOME.

Sheet P2.0:

a. Add electric water cooler symbol EWC-5 to the fixture schedule See attached fixture and rough-in schedule for EWC-5.
b. Change catch basin casting to read: East Jordan No. 6215 flat grate with frame on catch basin detail.
c. Add the following roof drain to the roof drain and miscellaneous schedule: RD-1 equal to Zurn Z-125-E-C.

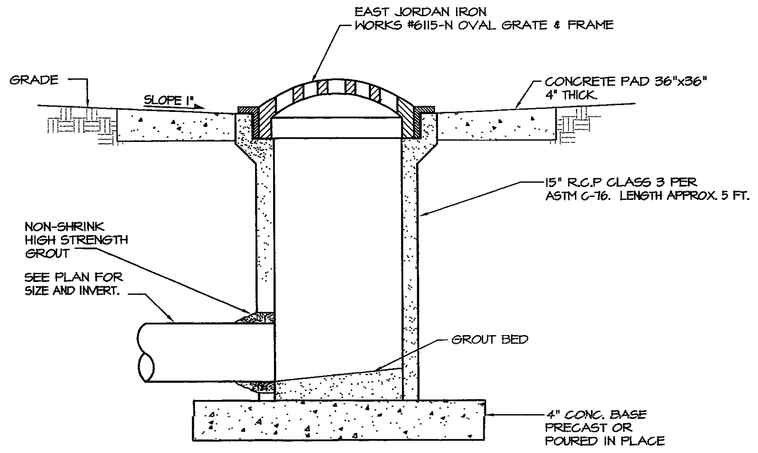

CATCH BASIN
SCALE: NONE

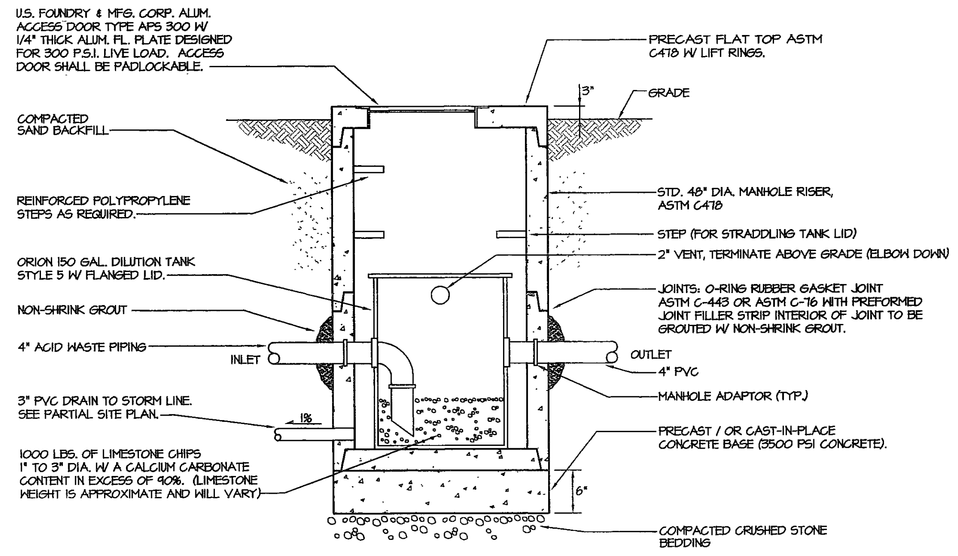

(APPROXIMATE OVERALL DEPTH 6'-0", FIELD VERIFY EXIST. PIPING INVERTS).

NEUTRALRATION BASIN
SCALE: NONE

FIXTURE SCHEDULE / ROUGH-IN SCHEDULE

SYM.	MANUFACT./MODEL	TRIM	HW	CW	WASTE	VENT	MTG. HT.	REMARKS
WC	KOHLER K-4330	SLOAN OPTIMA PLUS MODEL 8111-MC FLUSH VALVE; BENEKE 56355 WHITE SEAT.	--	1"	4"	2"	15" TO RIM	ZURN ADJUSTABLE CHAIR CARRIER
WC-1	KOHLER K-4330	SLOAN OPTIMA PLUS MODEL 8111-MC FLUSH VALVE; BENEKE 56355 WHITE SEAT.	--	1"	4"	2"	17" TO RIM	ZURN ADJUSTABLE CHAIR CARRIER
WC-2	EXISTING FIXTURE	SLOAN OPTIMA PLUS MODEL 8111-MC FLUSH VALVE; BENEKE 56355 WHITE SEAT.	--	--	--	--	17" TO RIM	REMOVE WATER CLOSET, RE-WORK ROUGH-IN, AND RE-INSTALL FOR ADA; 17" TO RIM AND 18" FROM CENTERLINE TO SIDE WALL OR PARTITION.
WC-3	KOHLER K-4330	SLOAN OPTIMA PLUS MODEL 8111-MC FLUSH VALVE; BENEKE 56355 WHITE SEAT.	--	--	--	--	--	MOUNTED TO EXIST. ROUGH-IN.
WC-4	KOHLER K-4330	SLOAN OPTIMA PLUS MODEL 8111-MC FLUSH VALVE; BENEKE 56355 WHITE SEAT.	--	--	--	--	17" TO RIM	RE-WORK EXIST. ROUGH-IN FOR NEW MTG. HEIGHT.
WC-5	EXISTING FIXTURE	SLOAN OPTIMA PLUS MODEL 8110-MC FLUSH VALVE; BENEKE 56355 WHITE SEAT.	--	--	--	--	--	
UR	KOHLER K-4960-ET	SLOAN OPTIMA PLUS MODEL 8186-1.0-MC FLUSH VALVE.	--	3/4"	2"	1 1/4"	24" TO RIM	ZURN Z-1222 CARRIER
UR-1	KOHLER K-4960-ET	SLOAN OPTIMA PLUS MODEL 8186-1.0-MC FLUSH VALVE.	--	3/4"	2"	1 1/4"	17" TO RIM	ZURN Z-1222 CARRIER
UR-2	KOHLER K-4960-ET	SLOAN OPTIMA PLUS MODEL 8186-1.0-MC FLUSH VALVE .	--	--	--	--	--	MOUNTED TO EXIST. ROUGH-IN.
UR-3	KOHLER K-4330	SLOAN OPTIMA PLUS MODEL 8186-1.0-MC FLUSH VALVE.	--	--	--	--	17" TO RIM	RE-WORK EXIST. ROUGH-IN FOR NEW MTG. HEIGHT.
UR-4	EXISTING FIXTURE	SLOAN OPTIMA PLUS MODEL 8186-MC FLUSH VALVE .	--	--	--	--	--	
UR-5	EXISTING FIXTURE	SLOAN OPTIMA PLUS MODEL 8180-MC FLUSH VALVE .	--	--	--	--	--	
LAV	KOHLER K-2032	DELTA MODEL 86T1153 FAUCET; KOHLER K-7115 GRID DRAIN; P-TRAP, ANGLE SUPPLY STOPS AND RISERS.	1/2"	1/2"	1 1/4"	1 1/4"	31" TO RIM	ZURN ZR-1231 SERIES CONCEALED ARM CARRIER.
LAV-1	KOHLER K-2032	DELTA MODEL 86T1153 FAUCET; KOHLER K-7115 GRID DRAIN; P-TRAP, ANGLE SUPPLY STOPS AND RISERS.	1/2"	1/2"	1 1/4"	1 1/4"	SEE FIG. 1	ZURN ZR-1231 SERIES CONCEALED ARM CARRIER. TRUE-BRO MODEL 102 HANDI LAV-GUARD INSULATION KIT.
LAV-2	KOHLER K-2032	DELTA MODEL 86T1153 FAUCET; KOHLER K-7115 GRID DRAIN; P-TRAP, ANGLE SUPPLY STOPS AND RISERS.	--	--	--	--	--	INSTALL LAVATORY AT EXIST. ROUGH-IN.
LAV-3	KOHLER K-2032	DELTA MODEL 86T1153 FAUCET; KOHLER K-7115 GRID DRAIN; P-TRAP, ANGLE SUPPLY STOPS AND RISERS.	--	--	--	--	SEE FIG. 1	RE-WORK EXIST. ROUGH-IN AS REQUIRED FOR NEW MOUNTING HEIGHT. TRUE-BRO MODEL 102 HANDI LAV-GUARD INSULATION KIT.
LAV-4	EXISTING FIXTURE	DELTA MODEL 86T1350 FAUCET; KOHLER K-7115 GRID DRAIN; P-TRAP, ANGLE SUPPLY STOPS AND RISERS.	--	--	--	--	--	
LAV-5	KOHLER K-2032	DELTA MODEL 21T114 FAUCET; KOHLER K-7115 GRID DRAIN; P-TRAP, ANGLE SUPPLY STOPS AND RISERS.	1/2"	1/2"	1 1/4"	1 1/4"	31" TO RIM	
LAV-6	EXISTING FIXTURE	DELTA MODEL 231348 FAUCET; 17 GA. GRID DRAIN; P-TRAP, SEE REMARKS.	--	--	--	--		REWORK SUPPLIES THROUGH FLOOR AND INSTALL AN EXPOSED LEONARD MODEL TA-F THERMOSTATIC MIXING VALVE UNDER LAV.
SK	JUST MODEL SL-2014-A-GR	DELTA MODEL 100-HFELHHDF FAUCET; P-TRAP, 1/2" ANGLE SUPPLY STOPS WITH RISERS; JUST .35 CUP STRAINER.	1/2"	1/2"	1 1/2"	1 1/4"	SEE NOTE 1	
SK-1	JUST MODEL SL-2014-A-GR	DELTA 26T2444 FAUCET; JUST .35 CUP STRAINER; ANGLE SUPPLY STOPS AND RISERS; P-TRAPS.	1/2"	1/2"	1 1/2"	1 1/4"	SEE NOTE 1	
SK-2	JUST MODEL SLX-2214-A-GR	DELAT MODEL 26T2133 FAUCET; 1/2" ANGLE SUPPLY STOPS WITH RISERS; JUST .35 CUP STRAINERS.	1/2"	1/2"	1 1/2"	1 1/4"	SEE NOTE 1	ZURN Z-1175 CLAY TRAP.
SK-3	FIAT MODEL FL-1	DELTA MODEL 27T3233 FAUCET; P-TRAP; ANGLE SUPPLY STOPS WITH RISERS.	1/2"	1/2"	1 1/2"	1 1/4"		
SK-4	JUST MODEL DL-2133-A-GR	DELTA MODEL 400-HFELHHDF FAUCET WITH SPRAY; .35 DRAIN; 1 1/2" P-TRAP; ANGLE SUPPLY STOPS AND RISERS; CONTINUOUS WASTE.	1/2"	1/2"	1 1/2"	1 1/4"	SEE NOTE 1	4 HOLE SINK PUNCH FOR HAND SPRAY. FURNISH WITH IN-SINK-ERATOR MODEL 17 BATCH FEED DISPOSER.
SK-5	JUST MODEL SL-2114 (4 HOLE)	DELTA MODEL 100-HFELHHDF FAUCET; P-TRAP; STRAIGHT SUPPLY STOPS WITH RISERS; JUST .35 CUP STRAINER.	1/2"	1/2"	1 1/2"	1 1/4"	SEE NOTE 1	SEE NOTE #2. INSTALL TAIL PIECE WITH DISHWASHER CONNECTION & 3-WAY STOP VALVE OR SEPARATE STOP FOR DISHWASHER CONNECTION.
SK-6	LAB SINK FURNISED W/ CASEWORK	T&S BRASS MODEL BL-5705-B FAUCET AND ZURN Z-1175 SEDIMENT TAP.	--	1/2"	1 1/2"	1 1/4"	SEE NOTE 1	
SK-7	LAB SINK FURNISED W/ CASEWORK	T&S BRASS MODEL BL-5705-B FAUCET AND ZURN Z-1175 SEDIMENT TAP.	1/2"	1/2"	1 1/2"	1 1/4"	SEE NOTE 1	
EWC	OASIS P8AM	1 1/4" P-TRAP, 1/2" ANGLE SUPPLY STOP AND RISER.	--	1/2"	1 1/4"	1 1/4"	40" TO RIM	
EWC-1	OASIS P8AM	1 1/4" P-TRAP, 1/2" ANGLE SUPPLY STOP AND RISER.	--	1/2"	1 1/4"	1 1/4"	SEE FIG. 2	ADA WATER COOLER.
EWC-2	OASIS P8AM	1 1/4" P-TRAP, 1/2" ANGLE SUPPLY STOP AND RISER.	--	--	--	--	--	INSTALL EWC AT EXIST. ROUGH-IN.
EWC-3	OASIS P8AM	1 1/4" P-TRAP, 1/2" ANGLE SUPPLY STOP AND RISER.	--	--	--	--	SEE FIG. 2	RE-WORK EXIST. ROUGH-IN AS REQUIRED FOR NEW MOUNTING HEIGHT.
EWC-4	OASIS PLF8M	1 1/4" P-TRAP, 1/2" ANGLE SUPPLY STOP AND RISER.	--	1/2"	1 1/4"	1 1/4"	40" TO BUBBLER	STAINLESS STEEL FINISH.
SH	EXISTING BRADLY 4 PERSON COLUMN SHOWER	INSTALL NEW BRADLEY STANDARD SHOWERHEAD 441.	--	--	--	--	--	
SH-1	BRADLEY MODEL 1HCA/6"-0"/EF/SX/15/RSD/SHV	S.S. WALL SHOWER WITH PRESSURE BALANCING VALVE, SEVERE SERVICE SHOWERHEAD, INDIVIDUAL STOPS, RECESSED SOAP DISH, VERTICAL SHROUD.	1/2"	1/2"	--	--	6'-0" TO SHOWER HEAD	SEE ROOM FINISH SCHEDULE FOR CEILING HEIGHT.
SH-2	BRADLEY MODEL 1HCA-ADA-5'-6"-EF-15	BARRIER FREE WALL SHOWER WITH PRESSURE BALANCING VALVE AND INDIVIDUAL STOPS FOR VALVES.	1/2"	1/2"	--	--	5'-6"	
MB	FIAT MODEL TSBCR-1100	#850-AA SERVICE FAUCET; #832-AA HOSE AND HOSE BRACKET; #884-CC MOP HANGER.	1/2"	1/2"	3"	1 1/2"	36" TO FAUCET	

FIXTURE SCHEDULE NOTES:

1. VERIFY CASEWORK HEIGHT WITH CASEWORK DRAWINGS.
2. INSTALL CHROME VACUUM BREAKER AT DISHWASHER CONNECTION AND LOCATE IN FOURTH HOLE OF SINK.

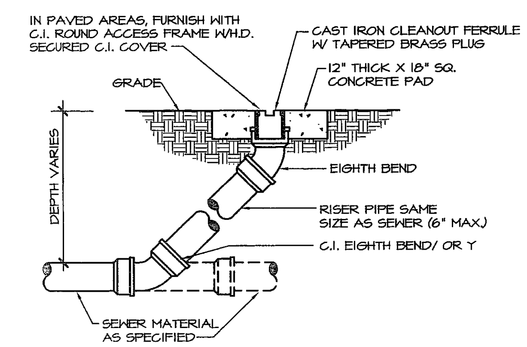

YARD CLEANOUT
SCALE: NONE

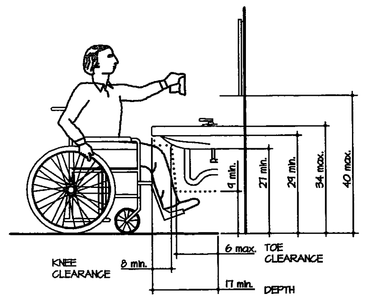

FIG. 1

LAVATORY CLEARANCE
SCALE: NONE

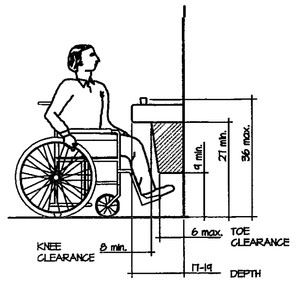

FIG. 2

ADULT A.D.A. WATER COOLERS
SCALE: NONE

ARCHITECTS
ENGINEERS
PLANNERS

VEAZEY
PARROTT
DURKIN &
SHOULDERS

3850 Priority Way S. Dr.
Suite 118
Indianapolis, In 46240

RENOVATION PROJECT FOR:
DUNELAND SCHOOL CORPORATION
CHESTERTON MIDDLE SCHOOL
CHESTERTON, INDIANA

Drawing Title:
SCHEDULES & DETAILS

THOMAS H. DURKIN REGISTERED No. 19257 STATE OF INDIANA PROFESSIONAL ENGINEER

Project No:	9980.00
Project Date:	06-12-00
Drawn By:	RLW
Approved By:	KLF
Drawing No:	P 2.0

2000-P-19