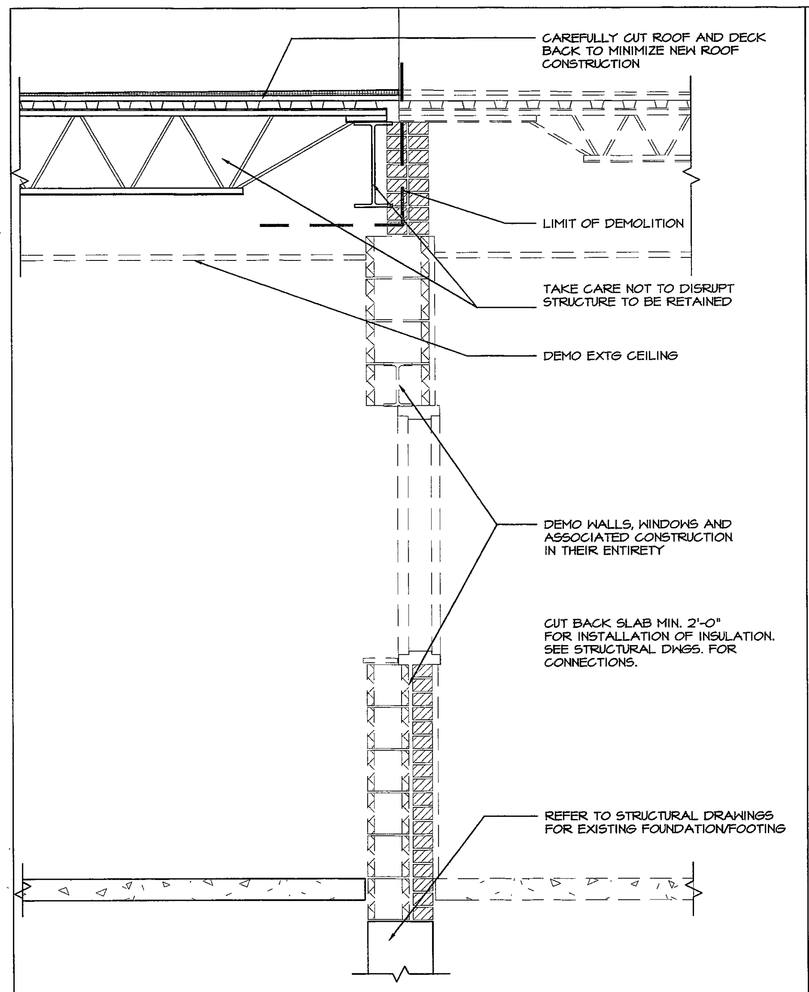

3/A3.6 WALL SECTION

SCALE: 3/4" = 1'-0"

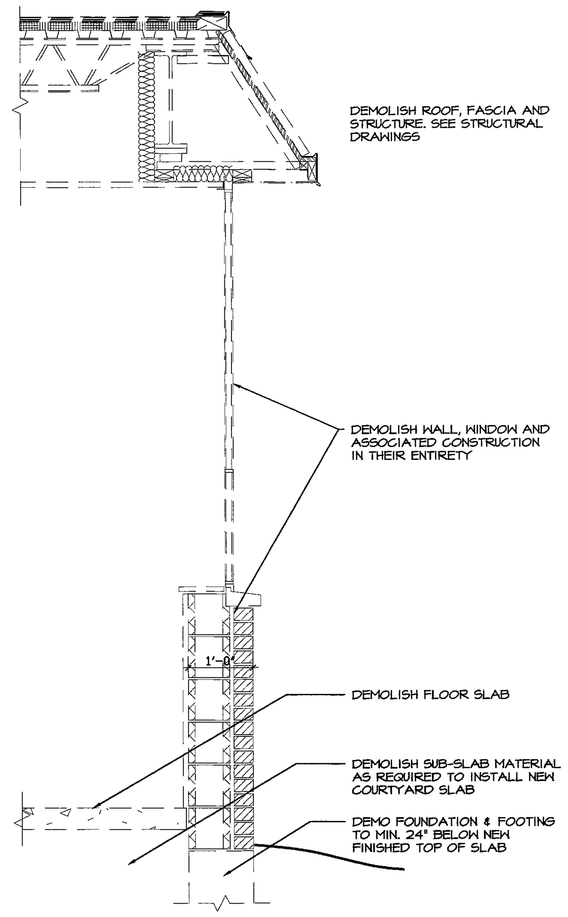

2/A3.6 WALL SECTION

SCALE: 3/4" = 1'-0"

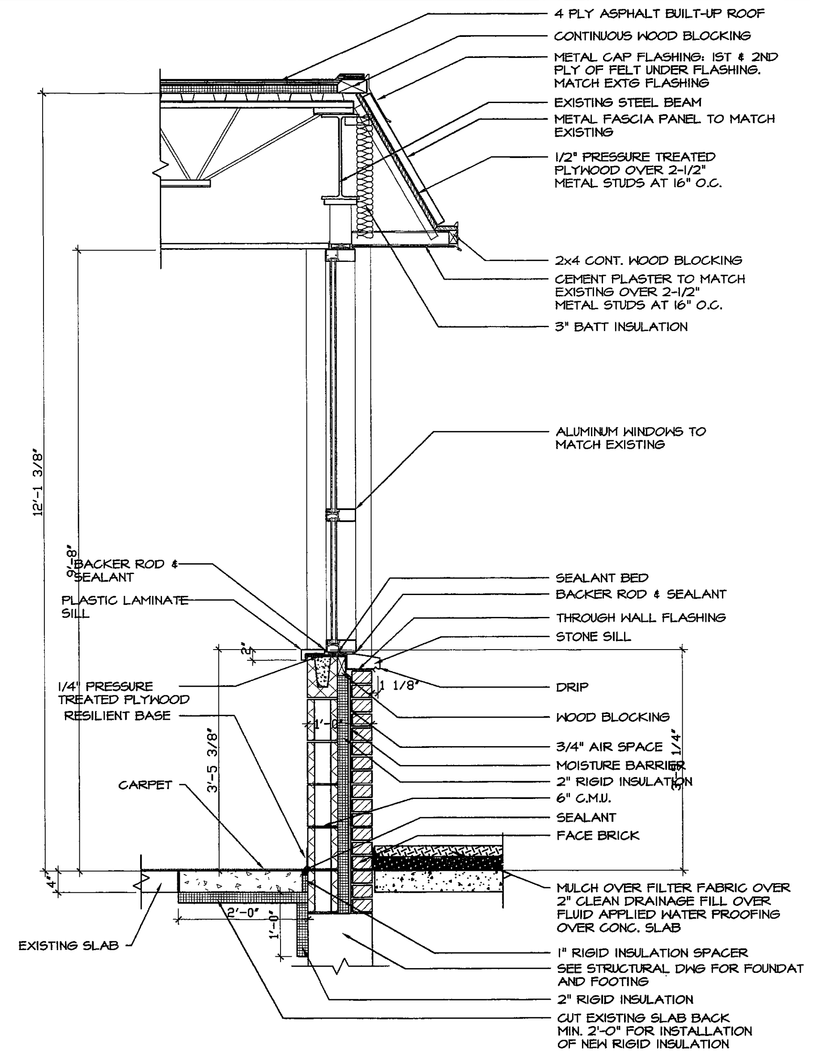

1/A3.6 WALL SECTION

SCALE: 3/4" = 1'-0"

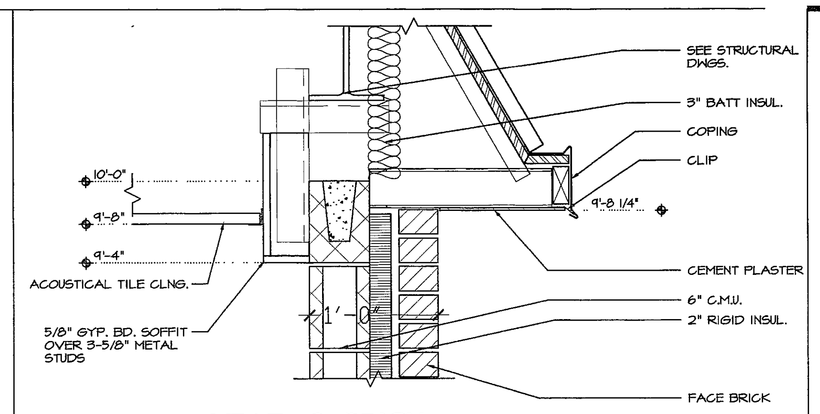

7/A3.6 HEAD @ BRICK

SCALE: 1-1/2" = 1'-0"

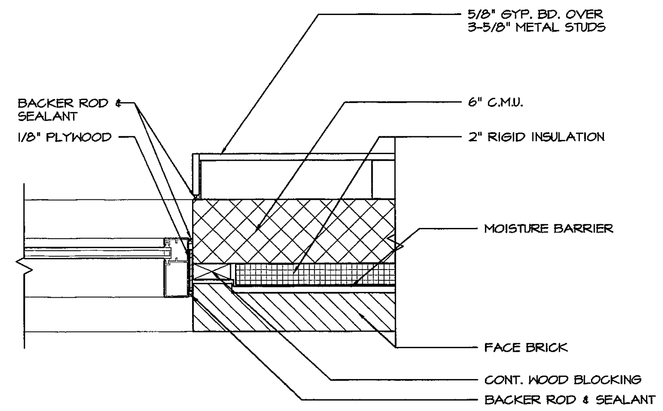

8/A3.6 JAMB @ TOP WHERE STEEL IS BELOW CEILING

SCALE: 1-1/2" = 1'-0"

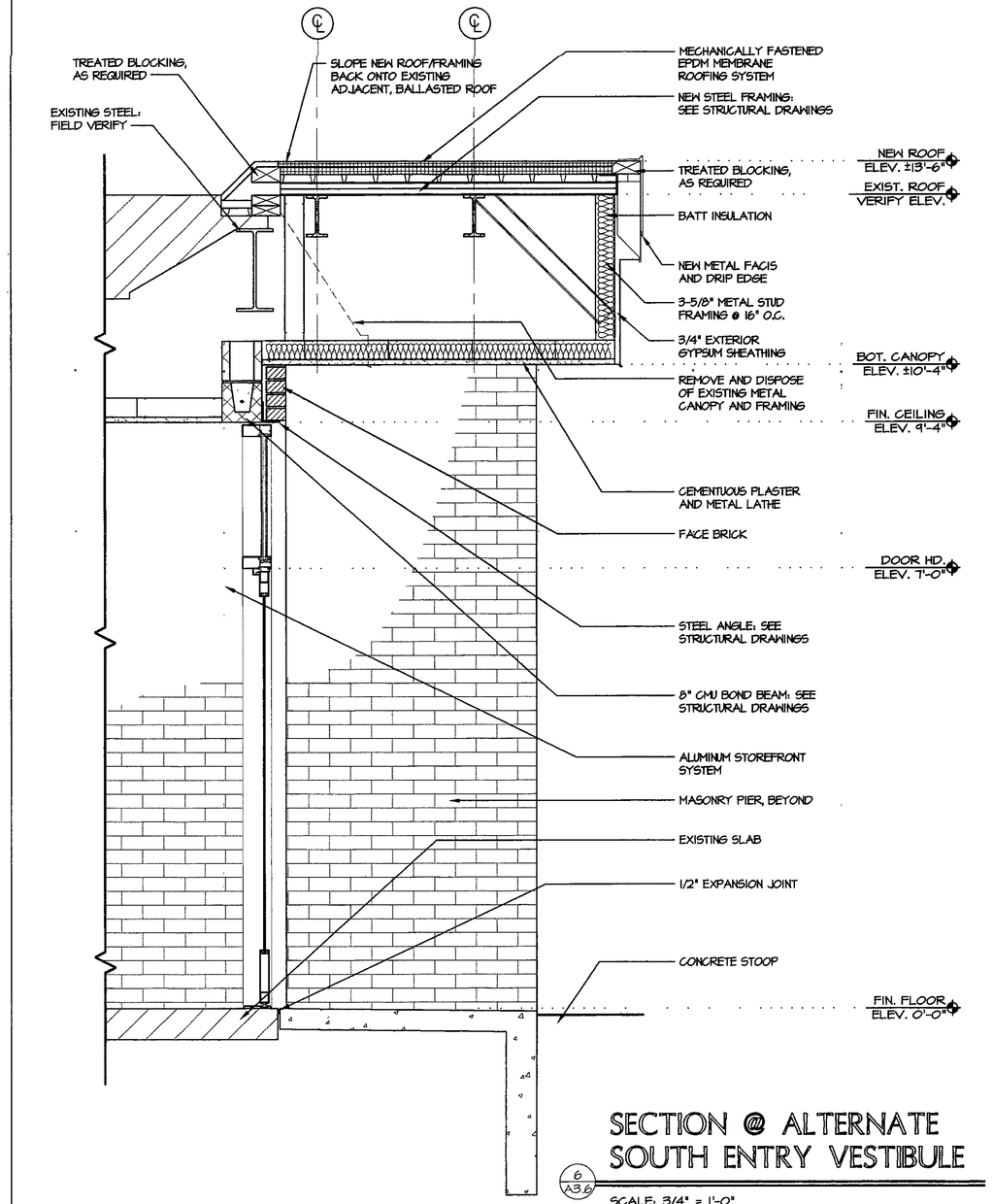

6/A3.6 SECTION @ ALTERNATE SOUTH ENTRY VESTIBULE

SCALE: 3/4" = 1'-0"

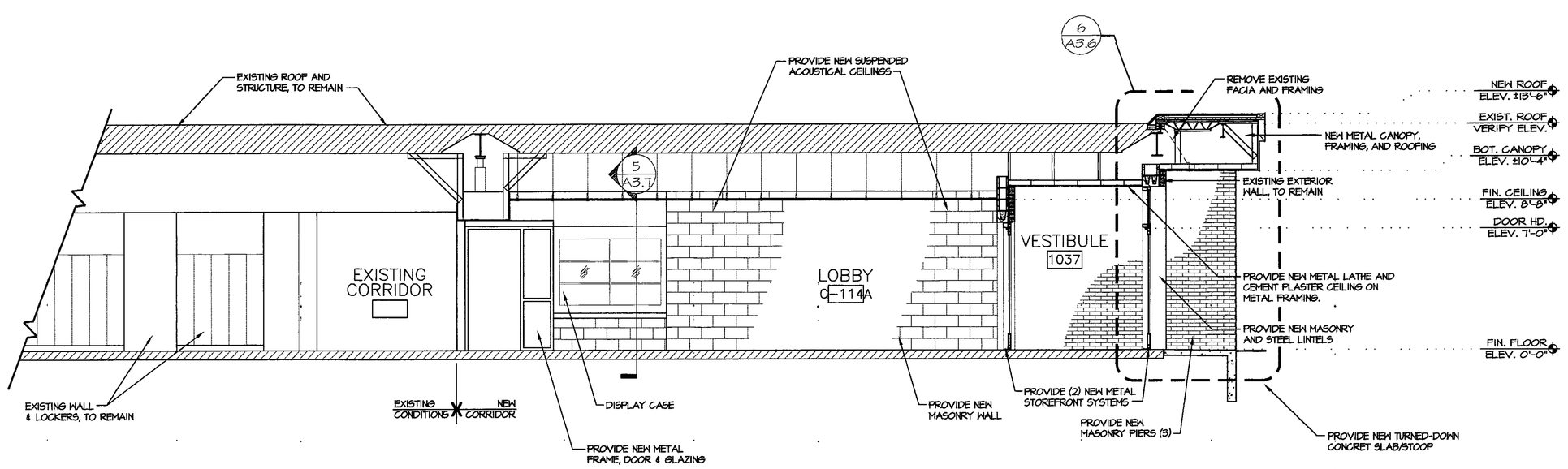

4/A3.6 BUILDING SECTION @ ALTERNATE SOUTH ENTRY

SCALE: 1/4" = 1'-0"

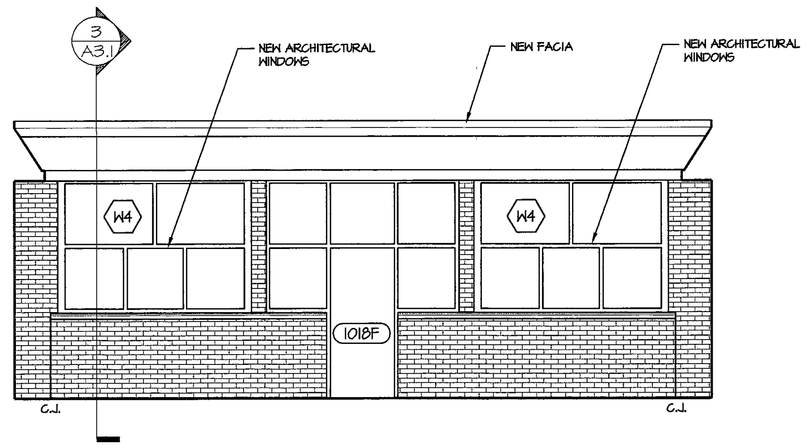

5/A3.6 EXTERIOR ELEVATION

SCALE: 1/4" = 1'-0"

2000-A-28

ARCHITECTS
ENGINEERS
PLANNERS

VEAZEY
PARROTT
DURKIN &
SHOULDERS

3850 Priority Way S. Dr.
Suite 116
Indianapolis, In 46240

RENOVATION PROJECT FOR:
DUNELAND SCHOOL CORPORATION
CHESTERTON MIDDLE SCHOOL
CHESTERTON, INDIANA

Drawing Title:
SECTIONS AND DETAILS

Project No:	9980.00
Project Date:	06-12-00
Drawn By:	JDB/DKB
Approved By:	VPDS
Drawing No:	A 3.6

CHARLES E. PARROTT REGISTERED No. 1757 STATE OF INDIANA ARCHITECT