EXISTING TECHNOLOGY SYMBOLS LEGEND

T.T.B. — TELEPHONE TERMINAL BOARD WITH PLYWOOD AND 120V DOUBLE DUPLEX CONVIENCE OUTLET.

T/C — TERMINAL TELEPHONE CABINET, WITH PLYWOOD INTERIOR AND 120V DOUBLE DUPLEX CONVENIENCE OUTLET INSIDE.

T/C — TELEPHONE/DATA OUTLET. PROVIDE A DOUBLE GANG RECESSED JUNCTION BOX 3-1/2" DEEP MOUNTED AT 16" A.F.F. . RUN 1" CONDUIT TO THE CABLE TRAY ABOVE THE FIRST FLOOR CORRIDOR CEILING.

TELEPHONE/DATA FLOOR DOUBLE GANG RECESSED JUNCTION BOX WITH COVER PLATE RUN 1" CONDUIT ABOVE WALL WITH 90° ELBOW. TERMINATE CONDUIT ABOVE CORRIDOR CEILING.

W — TELEPHONE WALL DOUBLE GANG RECESSED JUNCTION BOX WITH COVER PLATE MOUNT OUTLET AT 44" A.F.F. RUN 1" CONDUIT 6" ABOVE WALL WITH 90° ELBOW. TERMINATE CONDUIT ABOVE CORRIDOR CEILING.

VO — CEILING MOUNTED VIDEO OUTLET (VIDEO OUT) WITH DOUBLE GANG RECESSED BOX. RUN (2) 1" DEDICATED CONDUITS STUBBED 6" ABOVE WALL WITH 90 DEGREE ELBOW AND ALSO 1" CONDUIT TO VIDEO INPUT BELOW OR TEACHERS/ADMINISTRATION LOCATION. TERMINATE CONDUIT IN CORRIDOR CEILING. (REFER TO DETAIL)

VO — WALL MOUNTED VIDEO OUTLET WITH DOUBLE GANG RECESSED BOX. RUN (2) 1" DEDICATED CONDUITS STUBBED 6" ABOVE WALL WITH 90 DEGREE ELBOW AND ALSO 1" CONDUIT TO VIDEO INPUT BELOW OR TEACHERS/ADMINISTRATION LOCATION. TERMINATE CONDUIT IN CORRIDOR CEILING. (REFER TO DETAIL)

TECHNOLOGY LEGEND

- T-# NUMBER OF MODULAR TELEPHONE JACKS/CABLES
- F-# NUMBER OF MODULAR FAX JACKS/CABLES
- C-# NUMBER OF MODULAR DATA JACKS/CABLES
- V-# NUMBER OF COAX CONNECTORS/CABLES (RCA)
- L-# NUMBER OF VIDEO CONTROL JACKS/CABLES
- (A) ACTIVE / HOT DATA OR TELEPHONE PORTS
- (NA) NON ACTIVE / NOT HOT DATA OR TELEPHONE PORTS
- (B) BLANK COVER PLATE

GENERAL PLAN NOTES:

A. RACEWAY, JUNCTION BOXES, AND CABLE TRAYS ARE PROVIDED UNDER EXISTING BUILDING ELECTRICAL CONTRACTOR UNLESS OTHERWISE NOTED. VERIFY LOCATIONS IN FIELD.

B. PROVIDE BLANK COVER PLATES FOR ALL UNUSED JUNCTION BOXES.

C. PROVIDE BLANK INSERTS FOR ALL UNUSED OPENINGS IN THE VOICE/VIDEO/DATA PLATES.

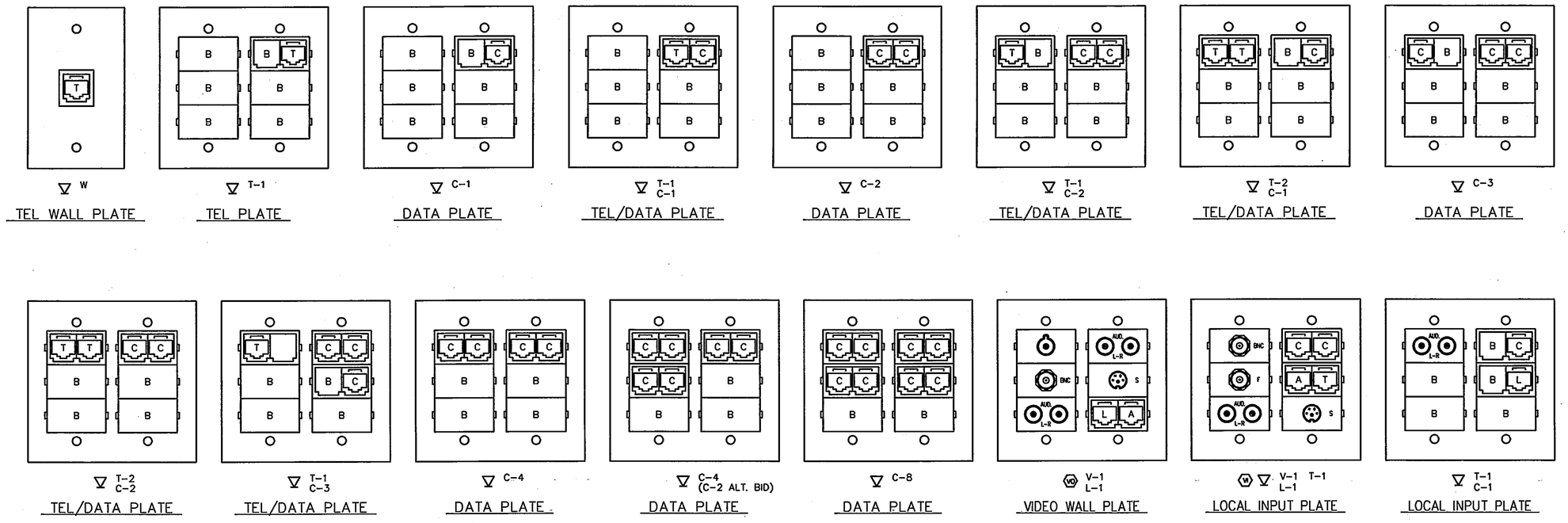

LEGEND
T - RJ45 TELEPHONE JACK
C - RJ45 DATA JACK
B - BLANK INSERT
V - VIDEO "F" CONNECTOR / "BNC"
S - "S" VIDEO MULTI-PIN CONNECTOR
L - LEVEL III LASER DISC CONTROL
RCA - VIDEO CONNECTOR

T.1 - TYPICAL WALL PLATE CONFIGURATIONS

NO SCALE

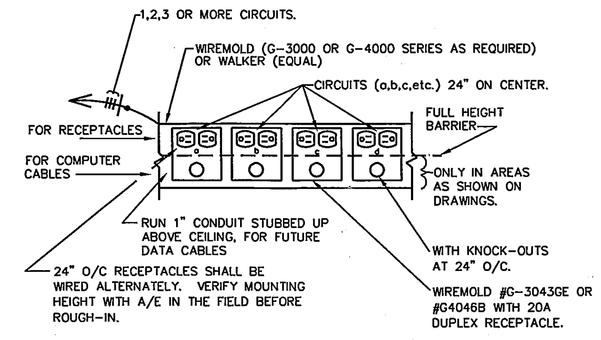

1. THE TECHNOLOGY CONTRACTOR SHALL PROVIDE NEW WIREMOLD G4048BF AND 5507FR7-G COMPLETE

PLUG-IN STRIP

NO SCALE:

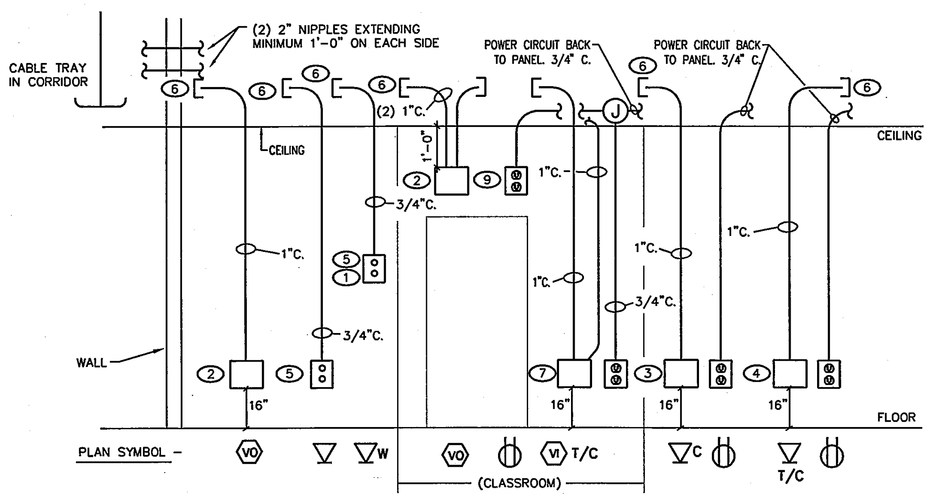

NOTES:
1. WALL MOUNTED AT 44" TELEPHONE OUTLET
2. VO - DOUBLE GANG BOX, 3.5" DEEP.
3. C - DOUBLE GANG BOX, 3.5" DEEP.
4. T/C - DOUBLE GANG BOX, 3.5" DEEP.
5. T - SINGLE GANG BOX, 3.5" DEEP.
6. STUB CONDUIT 6" ABOVE TOP OF WALL OR 6" ABOVE LAY-IN CEILING INTO SAME ROOM IF WALL EXTENDS TO ROOF STRUCTURE. PROVIDE 90° ELLS AND PLASTIC RINGS.
7. VIDEO INPUT VI.
8. TEACHERS STATION C/VO - DOUBLE GANG BOX, 3.5" DEEP.
9. VIDEO OUTLET & RECEPTACLE TO BE MOUNTED 12" FROM ADJACENT (CORNER) WALL.

T.6 TECHNOLOGY ELEVATION

(FOR REFERENCE ONLY)

NO SCALE

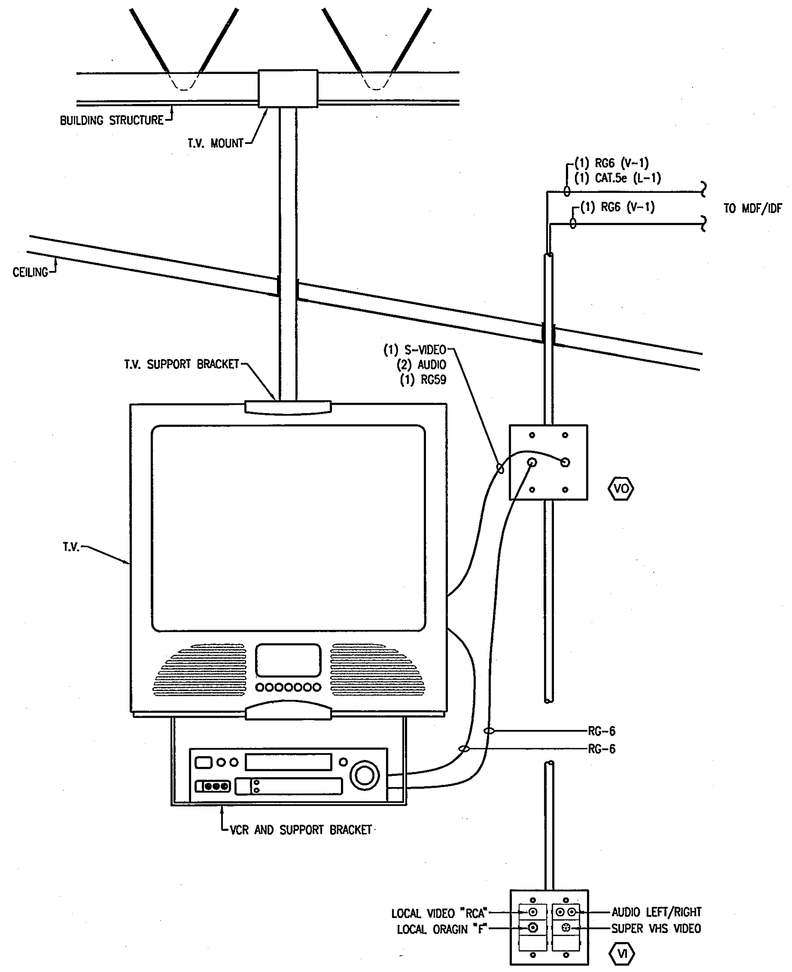

T.5 LOCAL INPUT PLATE - FOR ALL LOCATIONS WITH VO & VI

NO SCALE

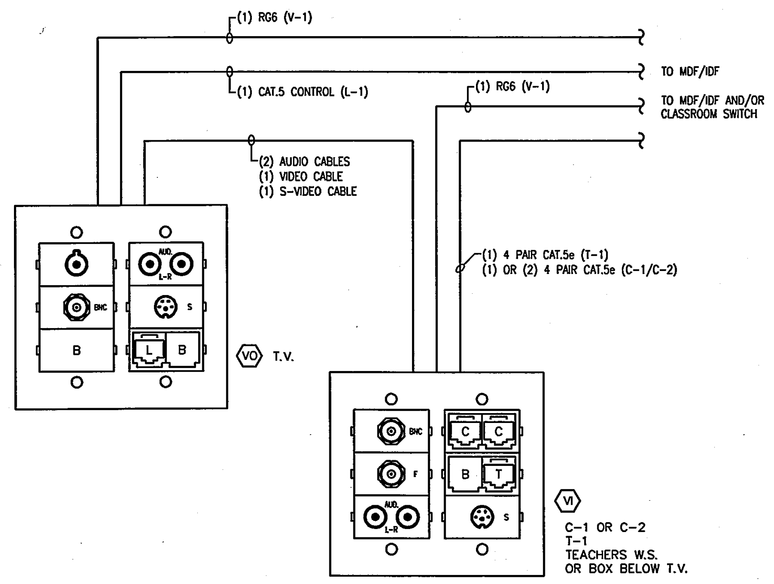

T.5A LOCAL INPUT FOR FEW ROOMS SUCH AS OFFICES

NO SCALE

COPYRIGHT 1999 BY FANNING/HOWEY ASSOCIATES,INC

THE NEW
CHESTERTON HIGH SCHOOL
TECHNOLOGY PACKAGE
DUNELAND SCHOOL CORPORATION
CHESTERTON, INDIANA

NORTH KEYPLAN

Fanning/Howey Associates, Inc.
Architects Engineers Consultants

TECHNOLOGY SYMBOLS / DETAILS			
DRAWN BY: JED	COMM. NO.: 95067.00	REVISIONS NO.	DATE
CHECKED BY: RSB	DATE: MAY 3, 1999		

TE1.1

CHESTERTON HIGH SCHOOL
95067.00

D:\95067.00\TECH\Te1-01.dwg Wed May 17 13:43:20 2000 John Dillon