DRAWING NO: 72703E35

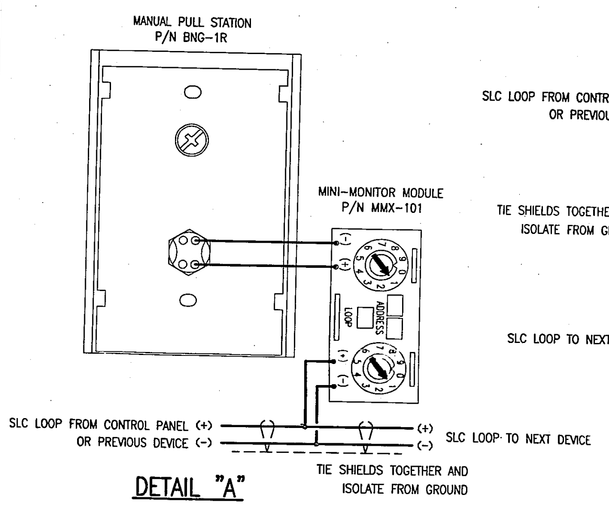

DETAIL "A"

MANUAL PULL STATION WIRING DETAIL
ELR=47K

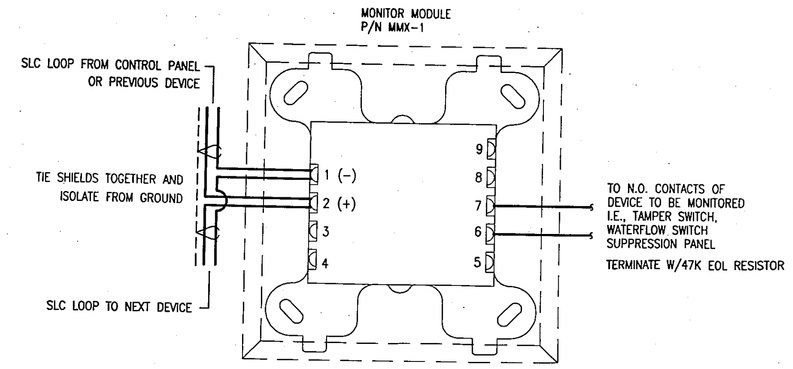

DETAIL "B"

MONITOR MODULE WIRING DETAIL

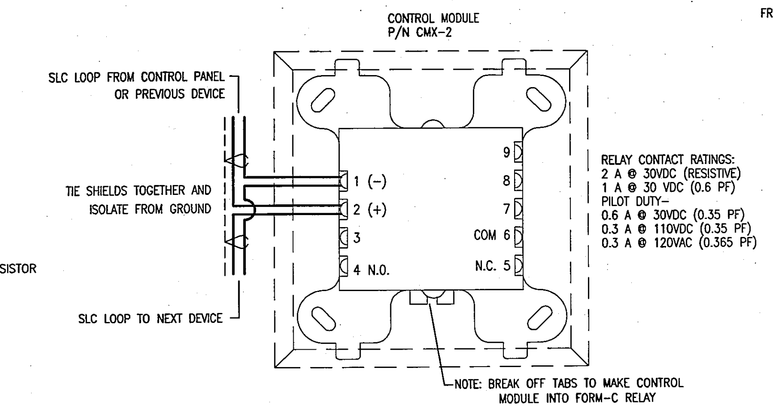

DETAIL "C"

CONTROL RELAY WIRING DETAIL
(FOR DOOR HOLDER/FAN CONTROL, ETC...)

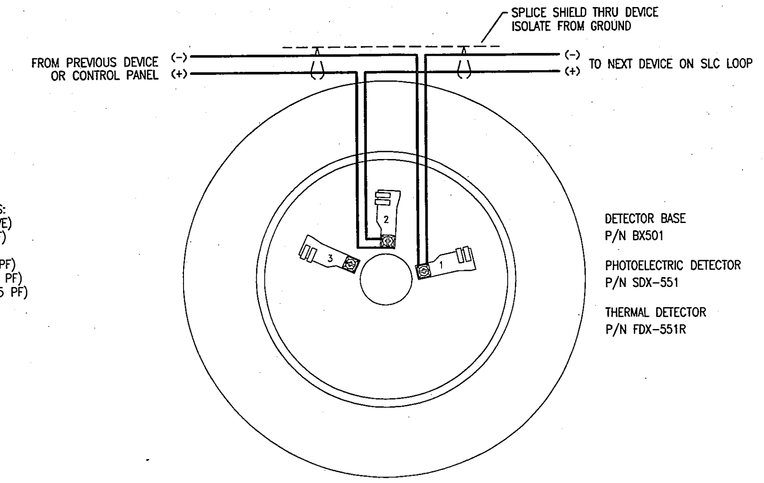

DETAIL "D"

DETECTOR (BASE) WIRING DETAIL

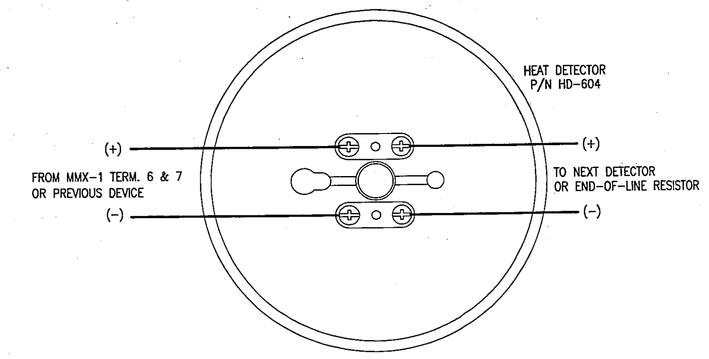

DETAIL "E"

CONVENTIONAL HEAT DETECTOR
ELR=47K

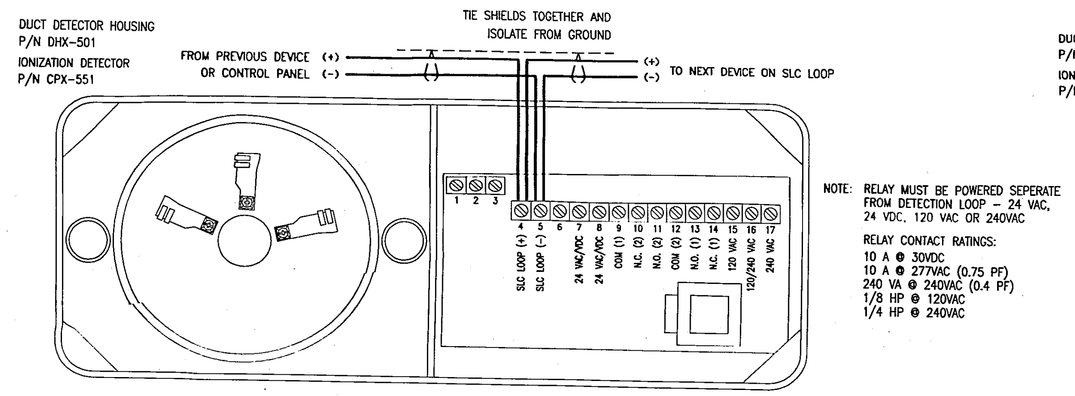

DETAIL "F"

DUCT DETECTOR WIRING DETAIL
(USED AT SMOKE DAMPERS)

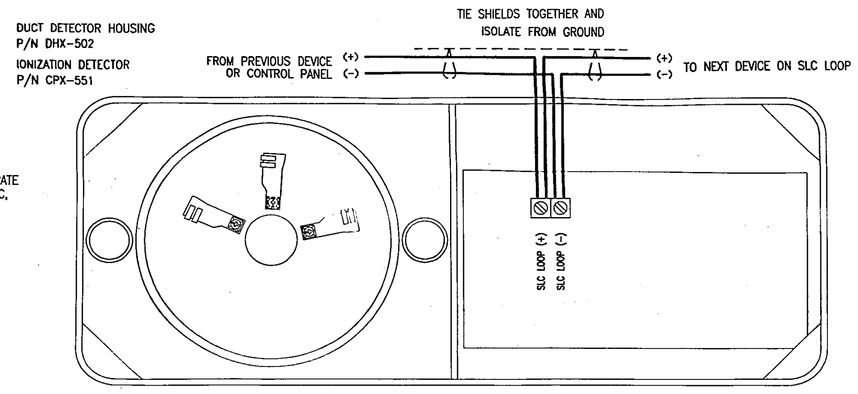

DETAIL "G"

DUCT DETECTOR WIRING DETAIL
(USED AT AHU's)

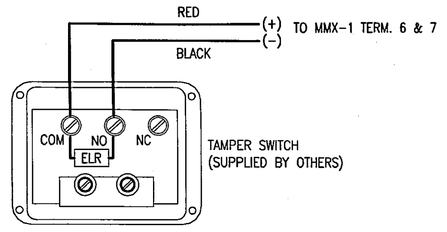

DETAIL "H"

TAMPER SWITCH WIRING DETAIL
ELR=47K

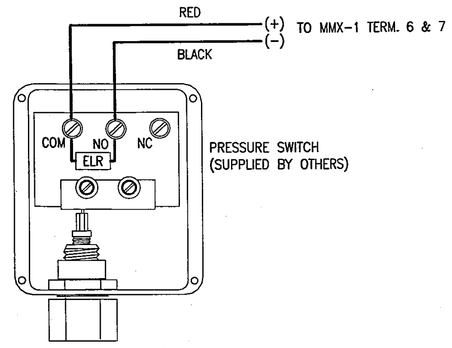

DETAIL "J"

WATERFLOW SWITCH WIRING DETAIL
ELR=47K

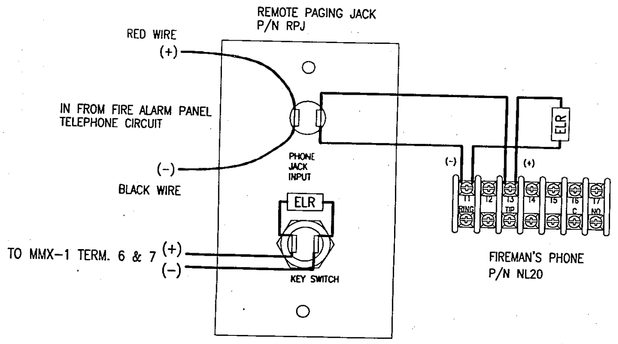

DETAIL "K"

TELEPHONE PAGING JACK WIRING
ELR=47K

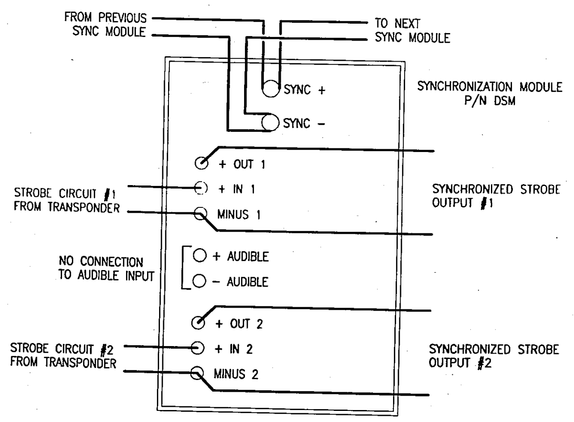

DETAIL "L"

STROBE SYNC MODULE WIRING

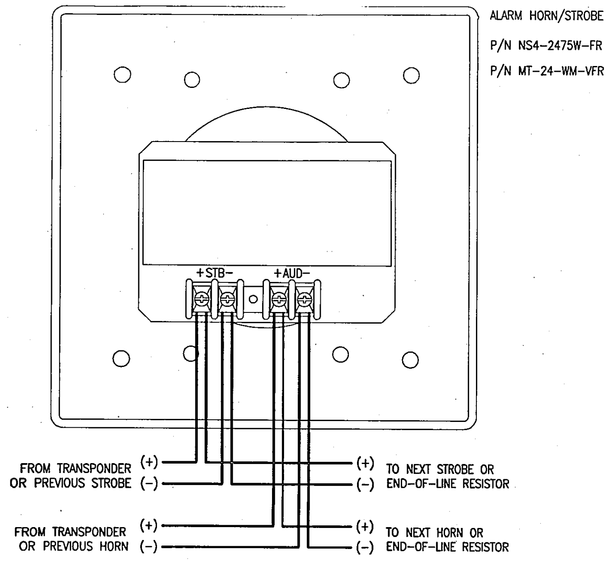

DETAIL "M"

ALARM HORN/STROBE WIRING DETAIL
ELR=47K

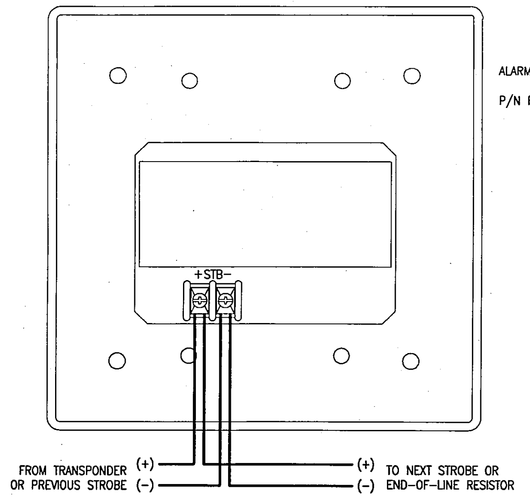

DETAIL "N"

ALARM STROBE WIRING DETAIL
ELR=47K

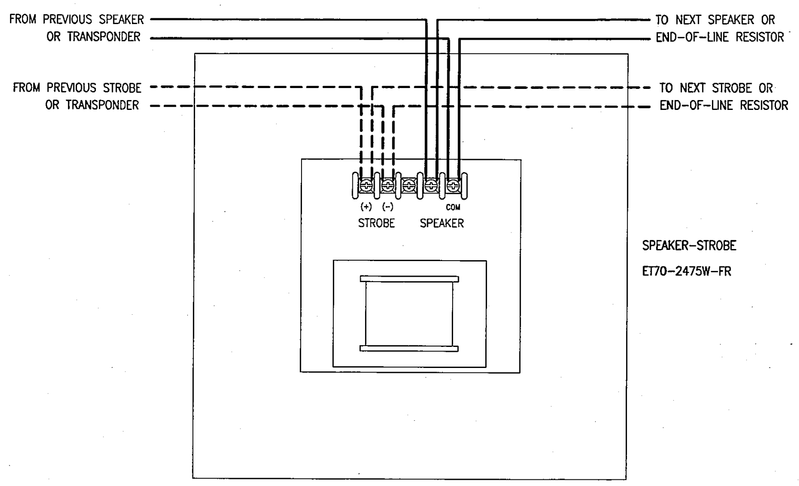

DETAIL "P"

SPEAKER/STROBE WIRING DETAIL
ELR=47K

EQUIPMENT LIST

A1	A2	B1	B2	C1	C2	D1	D2	E1	E2	F1	F2	G	Mz	H	J1	J2	K	L	M1	M2	N1	N2	P1	P2	Q1	Q2	TOT	MTG. HT.	SYMBOL	PART NUMBER	VENDOR	DESCRIPTION
1																											1	—	FAP	VAM-2020	NOTIFIER	VOICE ALARM FOR INTELLIGENT FIRE ALARM PANEL
1										1				1													4	—	ANN	LCD-80TM	NOTIFIER	LCD ANNUNCIATOR W/FLOOR PLAN MAP
8	2	7	5			4	1	7	5	3	1	7		5	14	4	2	4	4		5	1	3	1	9		102	48"	F	BNG-1R W/MMX-101	NOTIFIER	MANUAL PULL STATION W/MONITOR MODULE
11	4	8	9			14	6	8	8	7	1	10		13	13		9	15	5		10		6		16		173	80"		NS4-2475W-FR	NOTIFIER	HORN/STROBE
1																											1	80"	VP	MT-24-WM-VFR	NOTIFIER	HORN/STROBE, WEATHER-PROOF
14	4	24	21	6	6	18	9	25	26	9	3	14		2	18		4	8	2		4		4		5		226	80"	S	RSS-2475W-FR	NOTIFIER	STROBE
															6	4			4	2		3		4			23	80"	SPK	ET70-2475W-FR	NOTIFIER	SPEAKER/STROBE
1	1	2	3			2	1	2	3	1		3		2	8	3		7			1	4	1	2	3		50	—	S	SDX-551 w/BX-501	NOTIFIER	PHOTOELECTRIC SMOKE DETECTOR w/BASE
		1						1							5					20		1					28	—	T	FDX-551R w/BX-501	NOTIFIER	HEAT DETECTOR w/BASE
			14						15				16	6		6						16		16			95	—	S	DHX-502 w/CPX-551	NOTIFIER	DUCT DETECTOR HOUSING w/IONIZATION DETECTOR
															4			9	6			3		2	2		26	—	SD S	DHX-501 w/CPX-551	NOTIFIER	DUCT DETECTOR w/RELAY w/IONIZATION DETECTOR
			14						15				16	6	4	6		9	6			19		18	2		121	—		RA400Z	NOTIFIER	REMOTE LED
		2	4			1		2	4	1		2	10	4	6	2		3				14		9	1	6	71	—	CMX	CMX-2	NOTIFIER	CONTROL MODULE
4		5	1						1	3		3		26		2						3		4			53	—	MMX	MMX-1	NOTIFIER	MONITOR MODULE
																											30			DSM	NOTIFIER	SYNC MODULE

INSTALLATION NOTES

1. SLC LOOP. A TWISTED, SHIELDED PAIR 40 OHMS MAXIMUM.
2. ALL SHIELDS MUST BE SPLICED THROUGH DEVICE AND ISOLATED FROM GROUND.
3. INDICATING CIRCUIT POWER 24 VOLT 2 – #14 AWG
4. DEDICATED 120 VAC SERVICE. WIRE AS REQUIRED BY THE NATIONAL ELECTRIC CODE.
5. ALL CIRCUITS MUST BE SUPERVISED. NO PARALLEL BRANCHING OF WIRES, "TEE-TAPPING", IS ALLOWED WITH THE EXCEPTION OF THE INTELLIGENT SLC LOOP.
6. ALL SINGLE CONDUCTOR WIRE FOR 600 VOLT SERVICE SHALL BE STRANDED, COPPER CONDUCTOR WITH 90°C MAXIMUM CONTINUOUS CONDUCTOR TEMPERATURE EXCEPT IN HIGH TEMPERATURE LOCATIONS WHERE WIRE HAVING HIGHER TEMPERATURE RATED INSULATION SHALL BE USED.
7. EXACT LOCATION OF ALL EQUIPMENT IS TO BE DETERMINED IN THE FIELD. EXACT PLACEMENT MAY BE SUPERSEDED BY FIXTURES, DUCTS, TRAYS, PIPING, ETC...
8. ALL WIRING MUST CONFORM WITH N.E.C., STATE AND LOCAL CODES. LIMITED ENERGY CABLE MAY BE USED WHEN A CURRENT LIMITED CIRCUIT EXISTS. SUCH CABLE SHALL BE APPROVED BY LOCAL AUTHORITIES AND MEET ALL APPLICABLE CODES.
9. DETECTOR AND AUDIBLE ALARM DEVICE CIRCUIT POLARITY MUST BE OBSERVED.
10. AUDIBLE SIGNAL DEVICES MUST BE POLARIZED AND CONNECTED WITH ONE CONTINUOUS WIRE PAIR.
11. AC POWER IS TO BE SUPPLIED FROM A FUSIBLE, DEDICATED CIRCUIT AND ALL CIRCUIT BREAKERS MUST HAVE LOCKOUTS.
12. THE SYSTEMS, COMPONENT PARTS AND INSTALLATION SHALL COMPLY WITH THE APPLICABLE PORTIONS OF THE FOLLOWING CODES AND STANDARDS:
    - NFPA 70 – NATIONAL ELECTRIC CODE
    - NFPA 72 – NATIONAL FIRE ALARM CODE, ANSI, NEMA AND UL STANDARDS.
13. ALL CABLE AND WIRES TO BE TAGGED WITH APPROPRIATE CIRCUIT IDENTIFICATION AT TERMINATION'S AND SPLICES.
14. ALL LOW VOLTAGE DC SUPERVISED FIELD WIRING MUST BE ISOLATED FROM AC WIRING. DO NOT RUN DC WIRING IN SAME CONDUITS AS AC WIRING. INDUCED VOLTAGES CAN MIMIC GROUND FAULTS AND POTENTIALLY CAUSE ERRONEOUS PANEL OPERATION.

DETECTOR/MODULE ADDRESSING NOTES

L01M01 MODULE ADDRESS
SLC LOOP 01 – 10
ADDRESSABLE MODULE ADDRESS 01 TO 99
M-MODULE, D-DETECTOR

98-RP-37

NO.	DATE	BY	REVISIONS
C	11/11/98	KAL	ISSUED FOR CONSTRUCTION
B	8/13/98	KAL	CHANGED STROBE(S) CANDELA RATING TO 75 CD
A	7/16/98	KAL	ISSUED FOR REVIEW

REFERENCE DRAWINGS

DWG. NO.	DESCRIPTION

McDANIEL FIRE SYSTEMS
1055 W.JOLIET RD. • P.O.BOX 70
VALPARAISO, INDIANA 46385
(219)-462-0571

MFS JOB NO. 72703
INSURANCE
SCALE NONE
SPECIFICATION 95067.00
DESIGNED BY K. A. LINDSTEDT CHECKED BY T.E. POPE DATE 7/16/98

CHESTERTON HIGH SCHOOL
2125 S. 11TH STREET
CHESTERTON, INDIANA

FIRE ALARM & DETECTION SYSTEM
WIRING DETAILS, NOTES
AND EQUIPMENT LIST

DRAWING NO.: 72703E35 REV. 0 SHEET NO. 1 OF 1