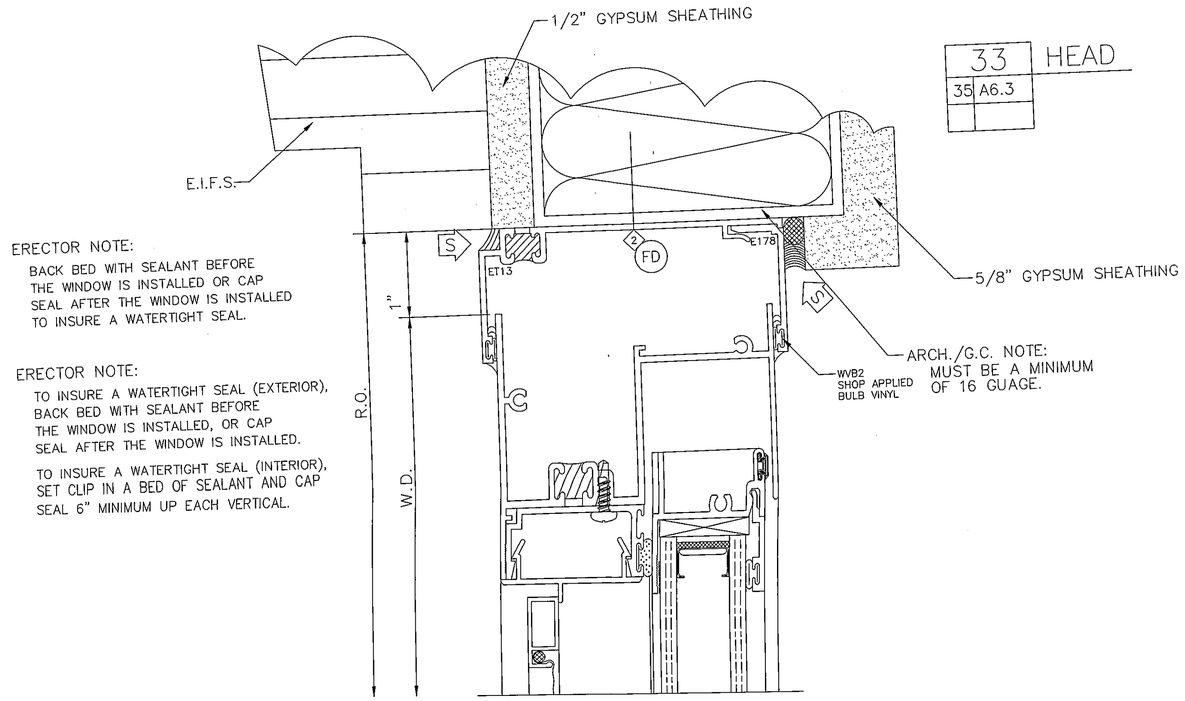

ERECTOR NOTE:

BACK BED WITH SEALANT BEFORE THE WINDOW IS INSTALLED OR CAP SEAL AFTER THE WINDOW IS INSTALLED TO INSURE A WATERTIGHT SEAL.

ERECTOR NOTE:

TO INSURE A WATERTIGHT SEAL (EXTERIOR), BACK BED WITH SEALANT BEFORE THE WINDOW IS INSTALLED, OR CAP SEAL AFTER THE WINDOW IS INSTALLED.

TO INSURE A WATERTIGHT SEAL (INTERIOR), SET CLIP IN A BED OF SEALANT AND CAP SEAL 6" MINIMUM UP EACH VERTICAL.

33	HEAD
35	A6.3

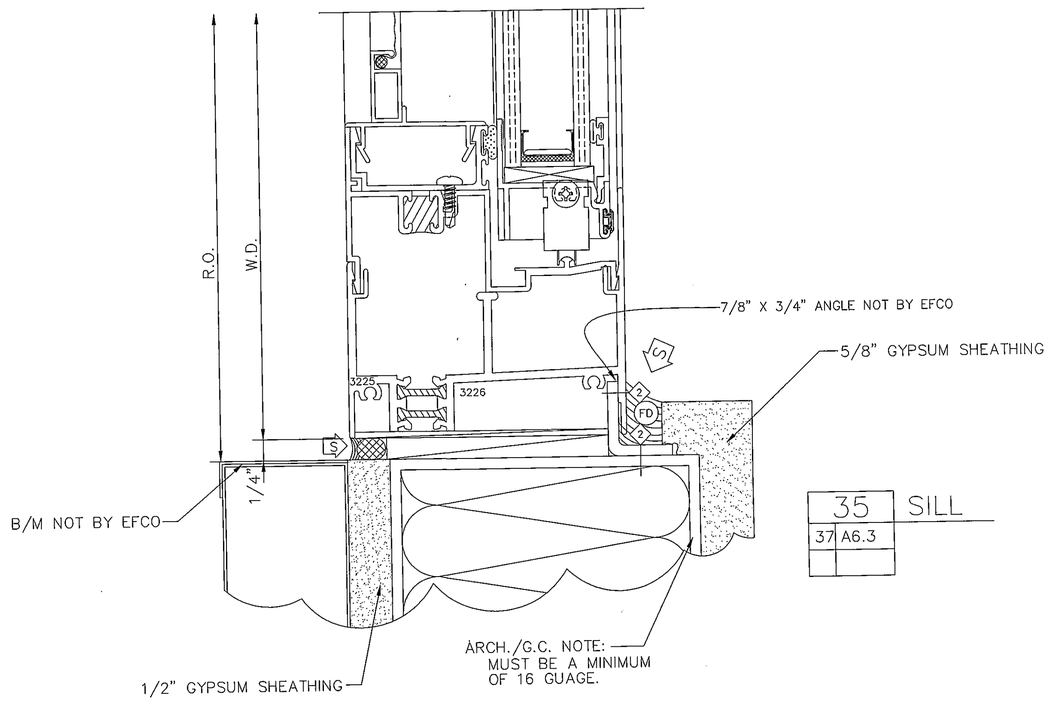

35	SILL
37	A6.3

© 1997 EFCO CORPORATION ALL RIGHTS RESERVED

PROJECT: CHESTERTON HIGH SCHOOL

LOCATION: CHESTERTON, INDIANA

EFCO CORPORATION

DRAWN BY: GE

CHECKED BY: C

JOB NO.: 7

SHEET N