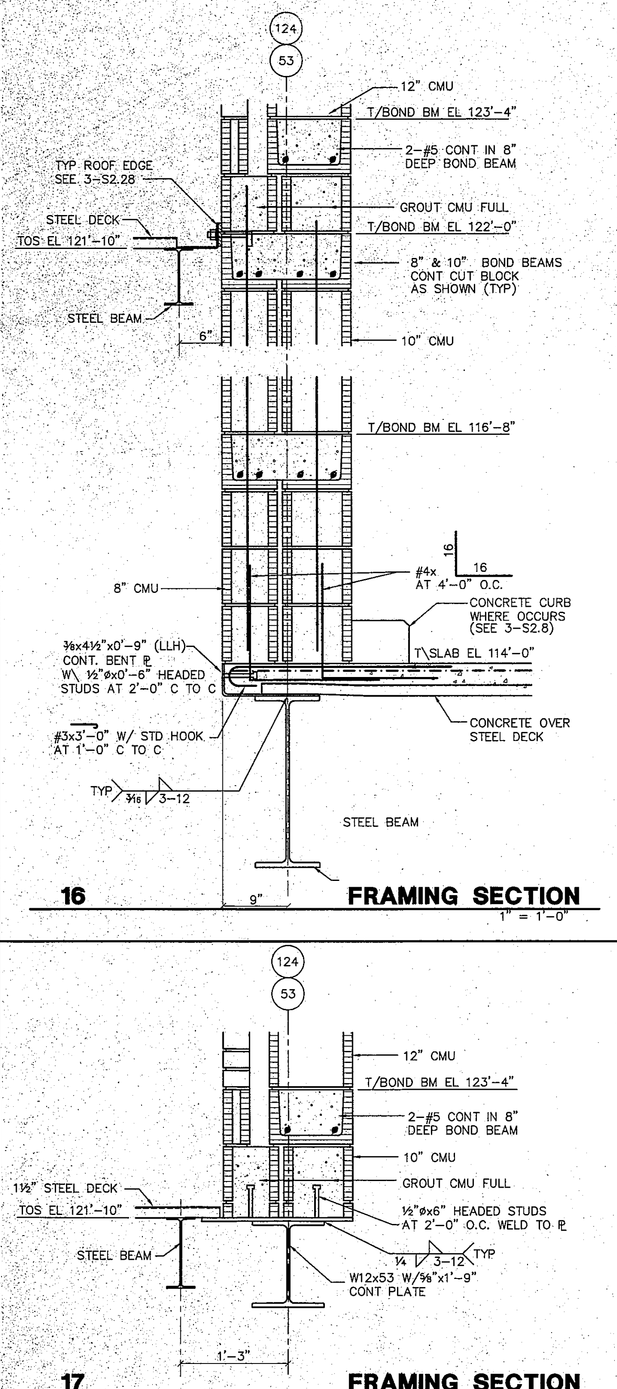

16 FRAMING SECTION
1" = 1'-0"

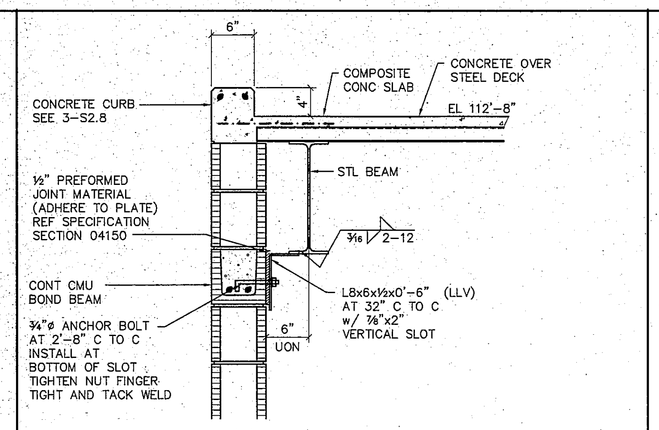

12 FLOOR SLAB EDGE
1" = 1'-0"

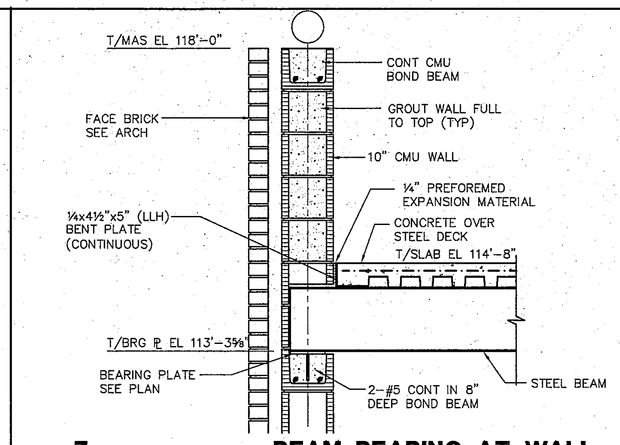

7 BEAM BEARING AT WALL
3/4" = 1'-0"

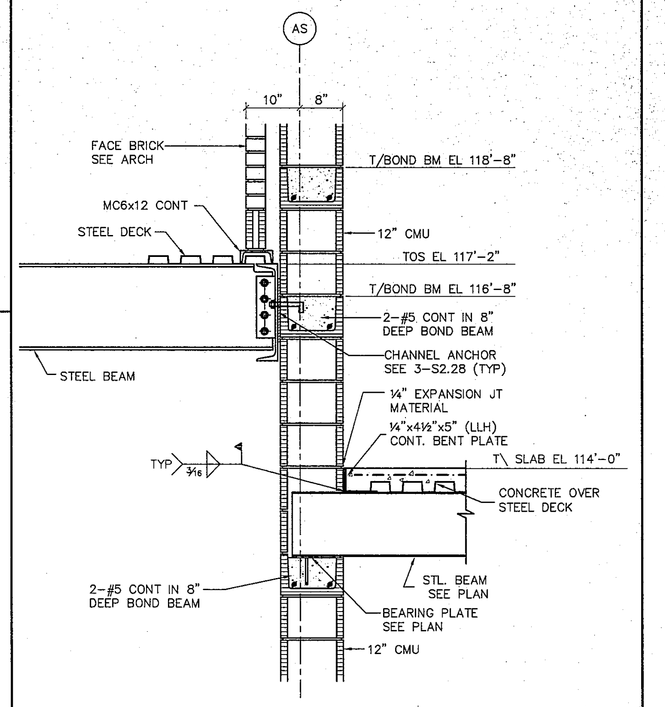

4 WALL SECTION
3/4" = 1'-0"

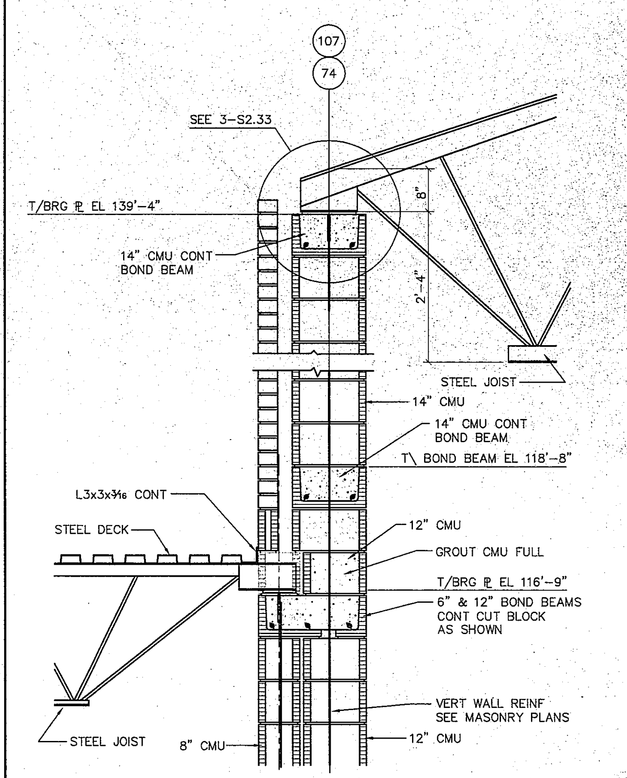

1 GYM WALL SECTION
3/4"=1'-0"

17 FRAMING SECTION
1" = 1'-0"

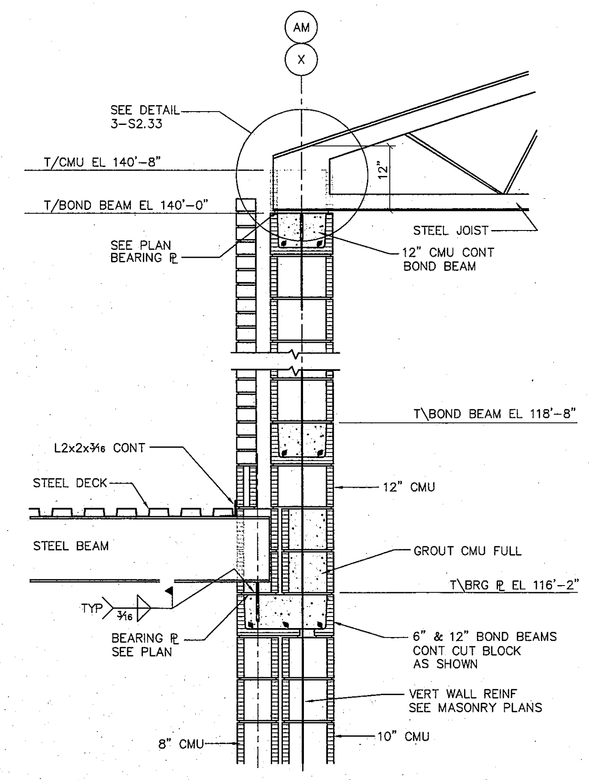

13 AUDITORIUM WALL SECTION
3/4"=1'-0"

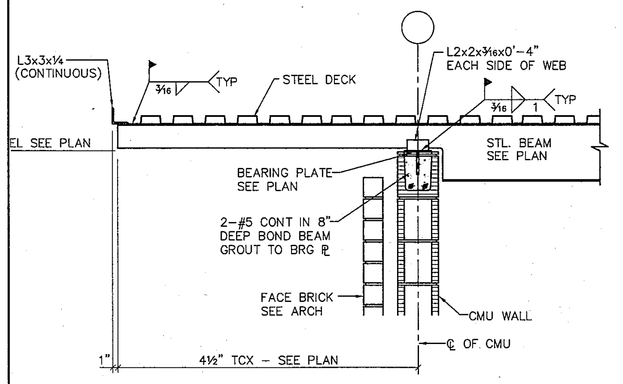

8 TYP ROOF EDGE
3/4" = 1'-0"

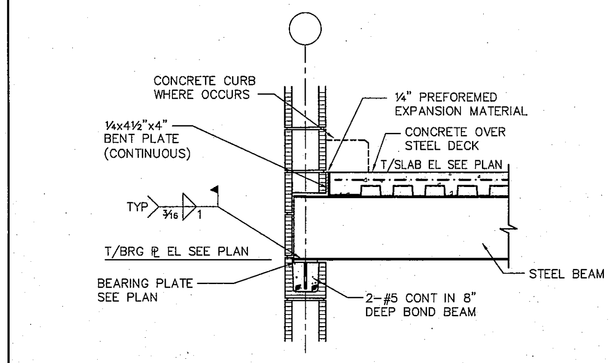

9 BEAM BEARING AT WALL
3/4" = 1'-0"

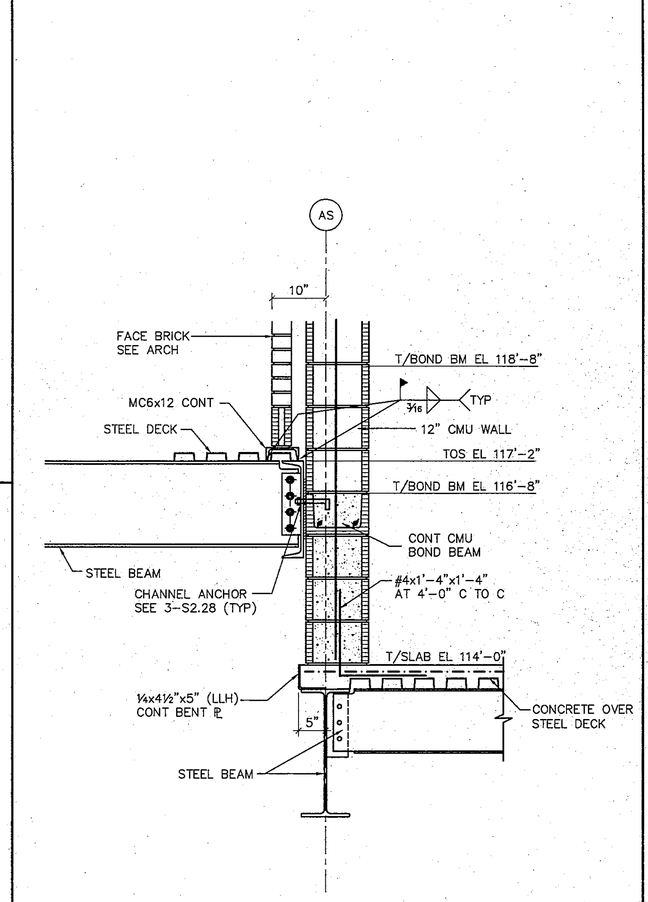

5 FRAMING SECTION
3/4" = 1'-0"

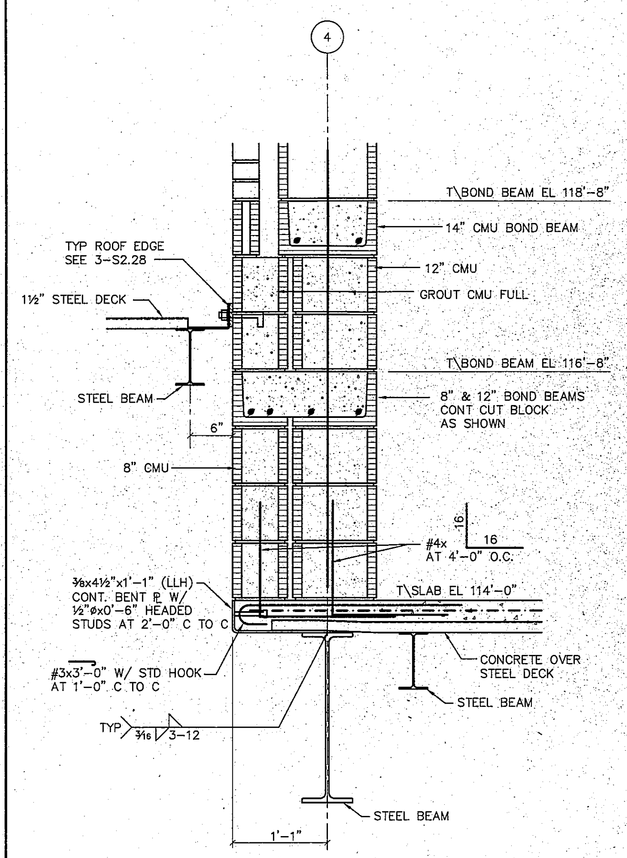

2 FRAMING SECTION
1" = 1'-0"

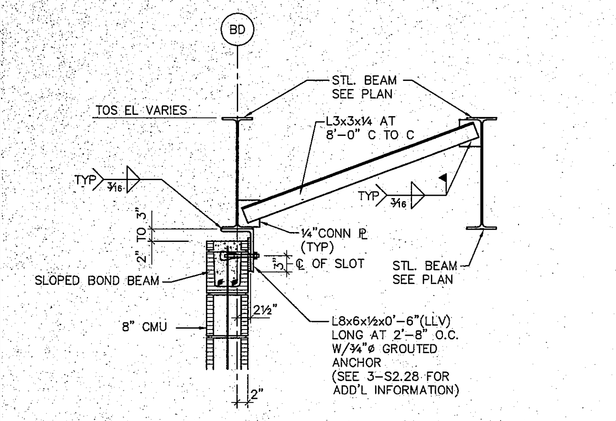

18 ROOF EDGE AT BEAM
3/4" = 1'-0"

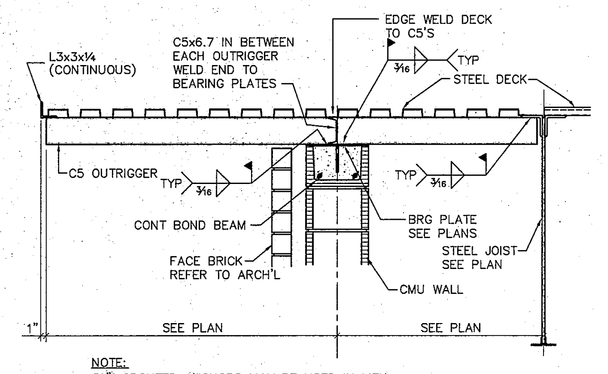

14 TYP ROOF EDGE
3/4" = 1'-0"

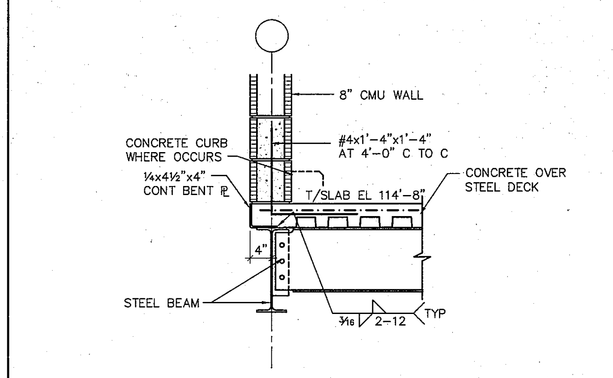

10 SECTION AT FLOOR EDGE
3/4" = 1'-0"

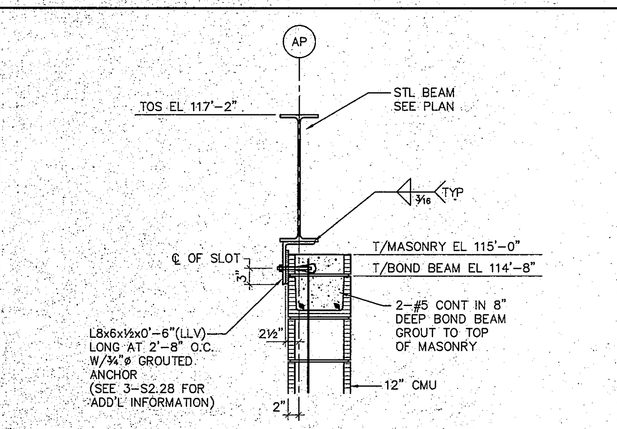

19 ROOF EDGE AT BEAM
3/4" = 1'-0"

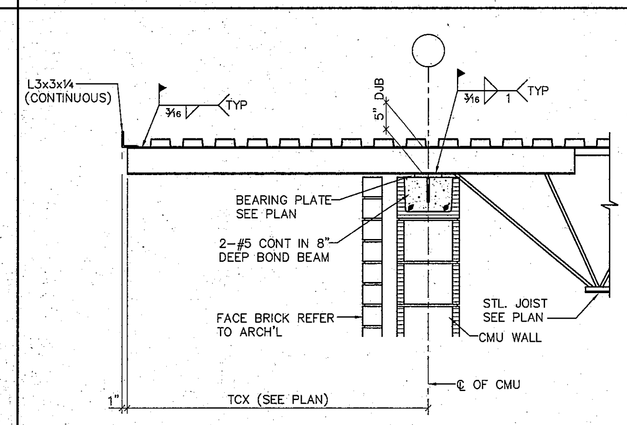

15 TYP ROOF EDGE
3/4" = 1'-0"

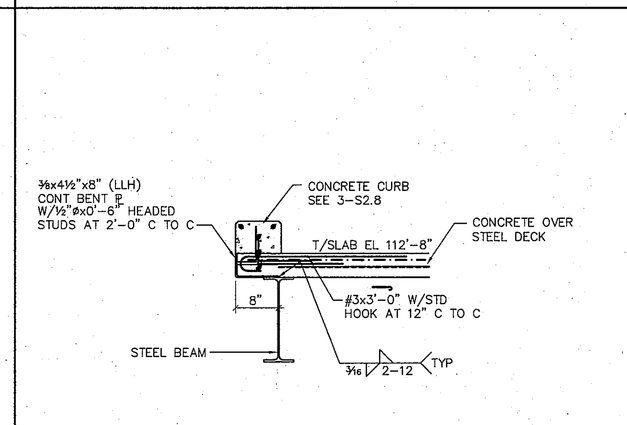

11 SECTION AT FLOOR EDGE
3/4" = 1'-0"

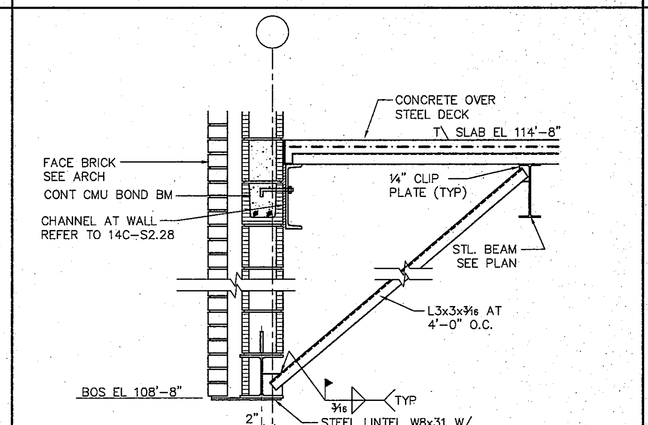

6 WALL SECTION
3/4" = 1'-0"

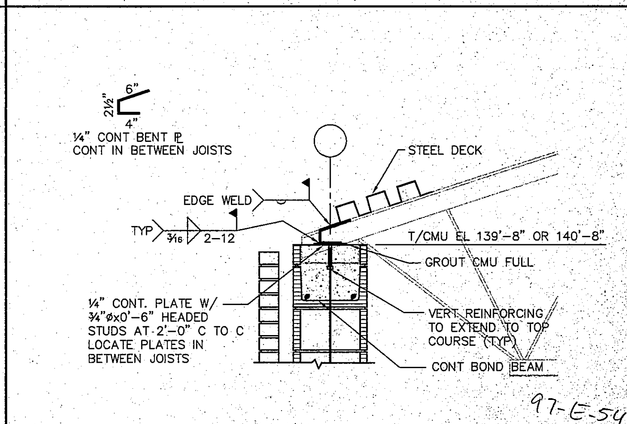

97-E-54

3 TYP DECK ATTACHMENT
3/4"=1'-0"

COPYRIGHT 1997 BY FANNING/HOWEY ASSOCIATES, INC.

GERALD E. KINTZ REGISTERED No. 7 1647 STATE INDIANA PROFESSIONAL ENGINEER

LEE BROCKUNIER REGISTERED No. 7 3666 STATE INDIANA ARCHITECT

THE NEW
CHESTERTON HIGH SCHOOL
FOR THE
DUNELAND SCHOOL CORPORATION
CHESTERTON, INDIANA

Fanning/Howey Associates, Inc.
Architects Engineers Consultants

FRAMING DETAILS

DRAWN BY: B.A.M.
CHECKED BY: D.D.F.
COMM. NO.: 95067.00
DATE: APRIL 21, 1997

REVISIONS NO. DATE

S2.33

CHESTERTON HIGH SCHOOL
95067.00

95067.00\STRC\S233 Thu Apr 17 17:57:21 1997 Jeff Ehagen