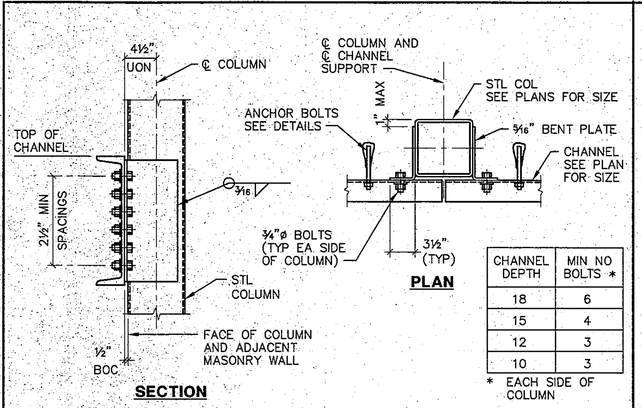

CHANNEL DEPTH	MIN NO BOLTS *
18	6
15	4
12	3
10	3

* EACH SIDE OF COLUMN

15 EXTERIOR CHANNEL FRAMING
1" = 1'-0"

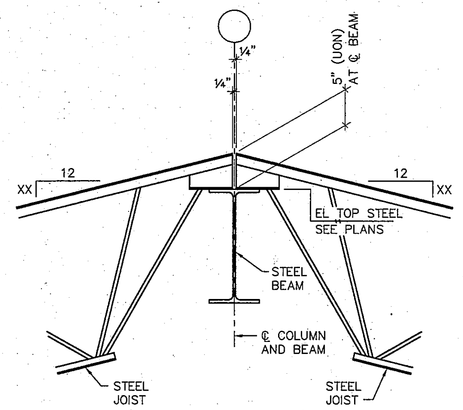

12 TYPICAL RIDGE BEAM (R)
1" = 1'-0"

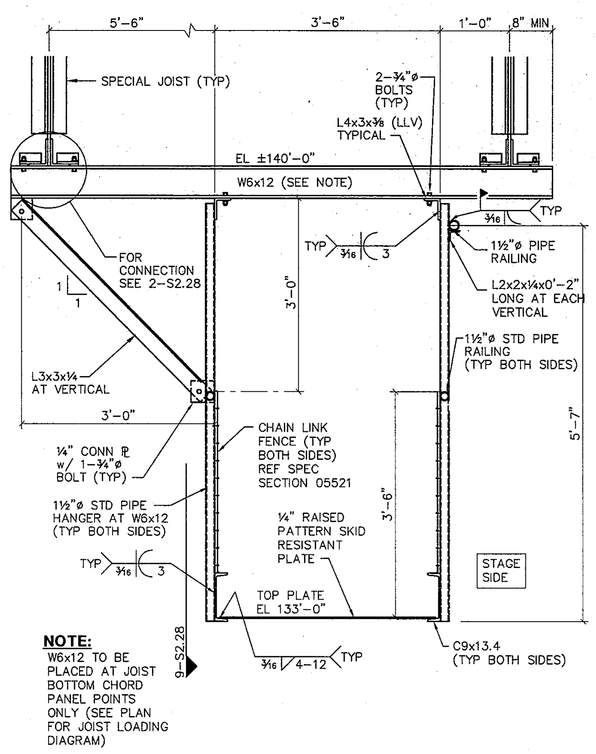

NOTE:
W6x12 TO BE PLACED AT JOIST BOTTOM CHORD PANEL POINTS ONLY (SEE PLAN FOR JOIST LOADING DIAGRAM)

8 ACCESS PLATFORM
NTS

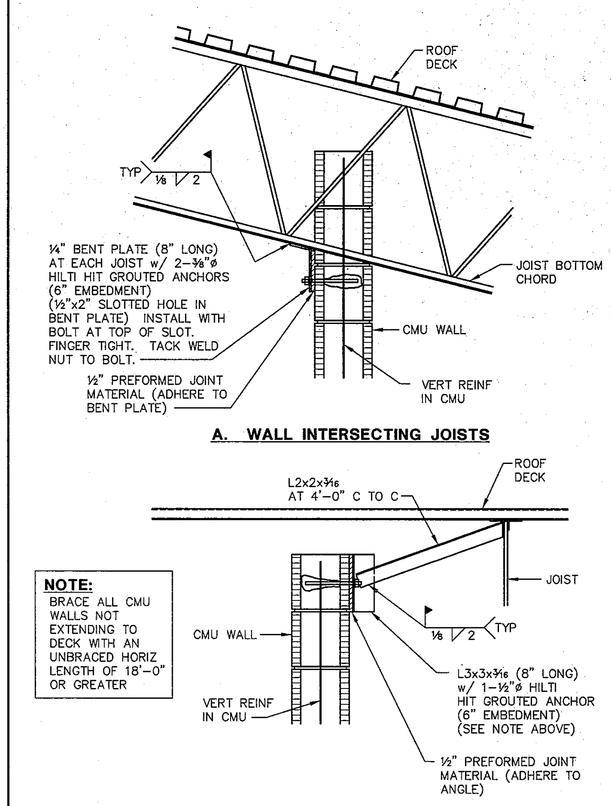

NOTE:
BRACE ALL CMU WALLS NOT EXTENDING TO DECK WITH AN UNBRACED HORIZ LENGTH OF 18'-0" OR GREATER

5 BRACING AT TOP MASONRY WALL
1" = 1'-0"

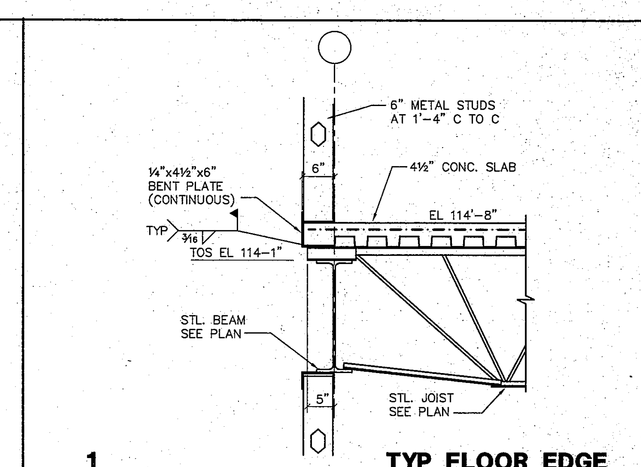

1 TYP FLOOR EDGE
¾" = 1'-0"

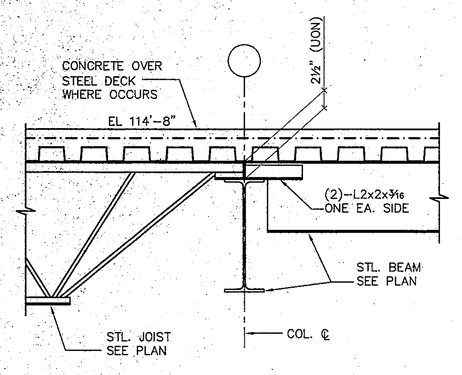

16 FLOOR FRAMING DETAIL
1" = 1'-0"

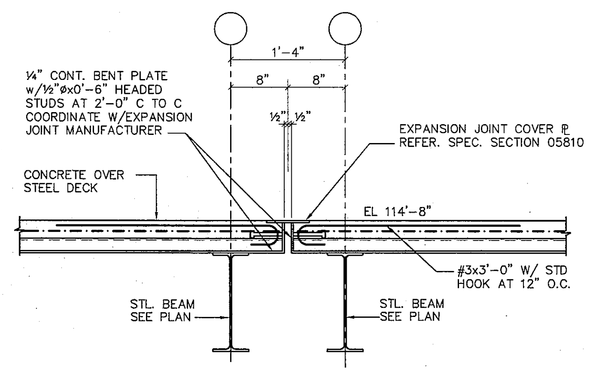

13 EXPANSION JOINT AT FLOOR
1" = 1'-0"

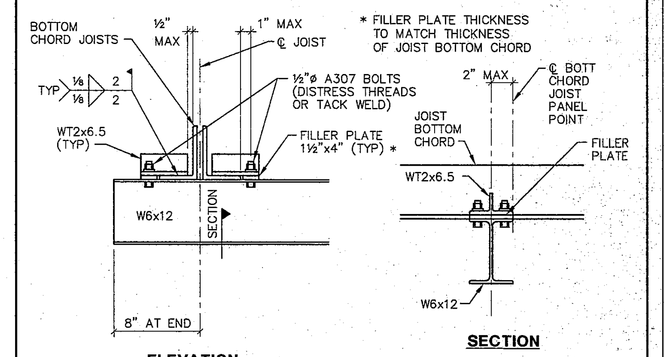

2 JOIST HANGER CONNECTION
1½" = 1'-0"

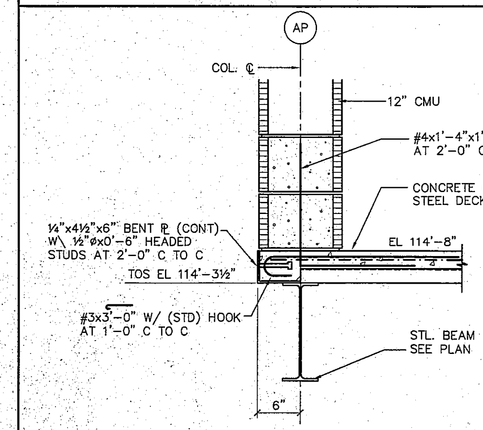

17 EDGE OF DECK
1" = 1'-0"

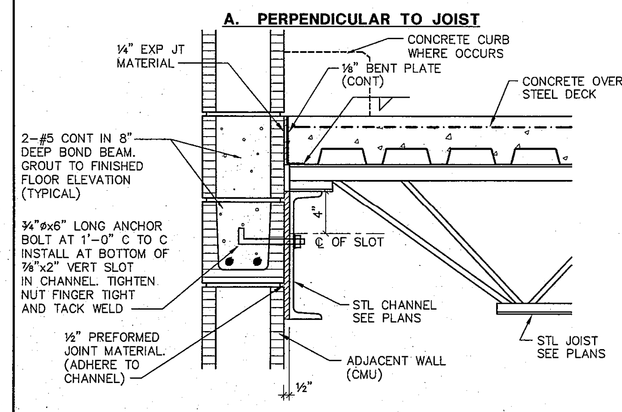

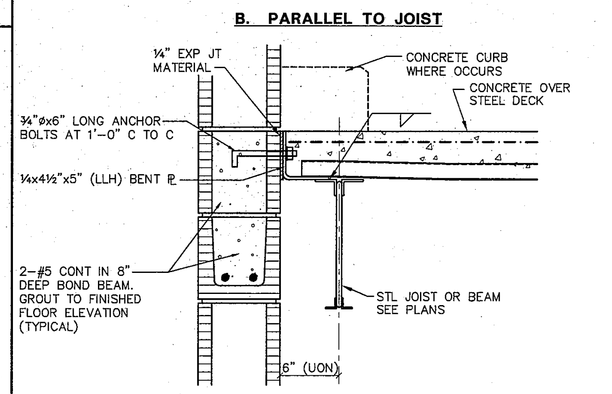

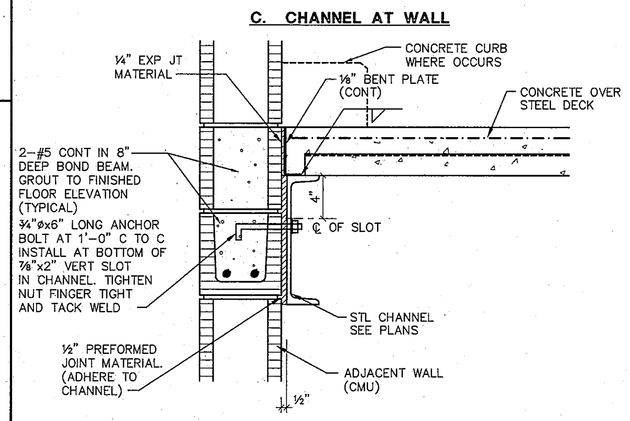

NOTE:
¾"ø GROUTED ANCHORS MAY BE USED IN LIEU OF ANCHOR BOLTS AT CONTRACTORS OPTION

14 TYPICAL CONCRETE FLOOR SLAB EDGE
NTS

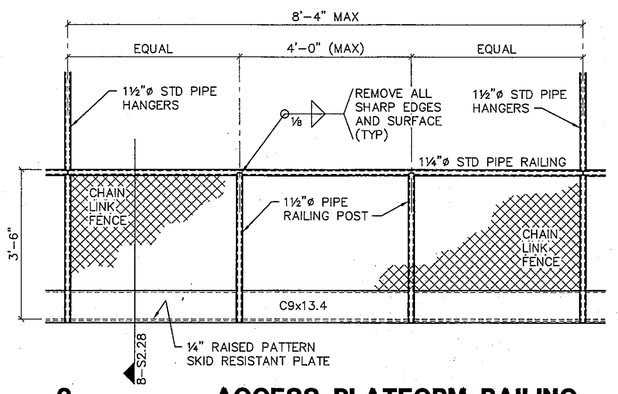

9 ACCESS PLATFORM RAILING
½" = 1'-0"

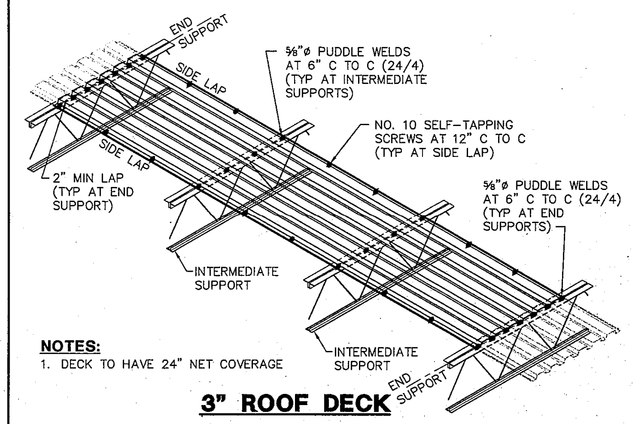

NOTES:
1. DECK TO HAVE 24" NET COVERAGE

3" ROOF DECK

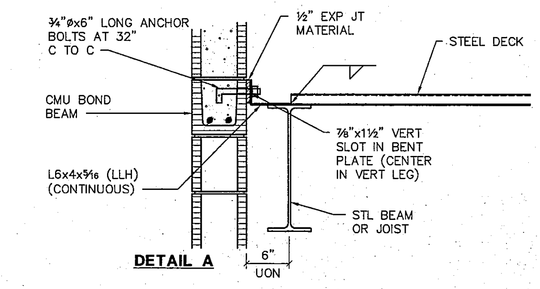

DETAIL A

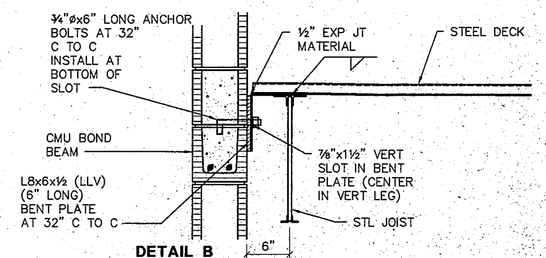

DETAIL B

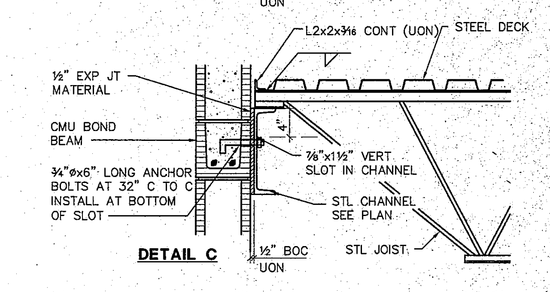

DETAIL C

NOTE: ¾"ø GROUTED ANCHORS MAY BE USED IN LIEU OF ANCHOR BOLTS AT CONTRACTOR'S OPTION

3 ROOF EDGE
1" = 1'-0"

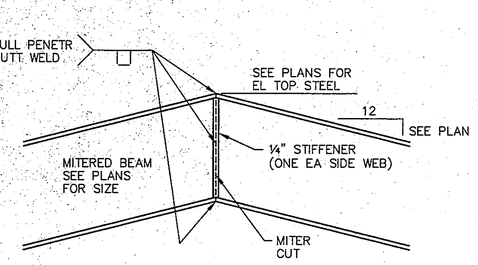

18 TYPICAL MITERED BEAM (M)
NTS

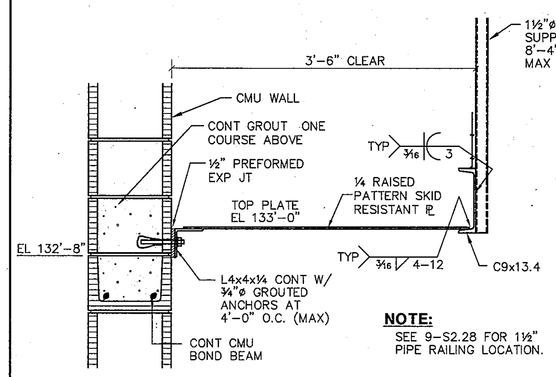

NOTE:
SEE 9-S2.28 FOR 1½" PIPE RAILING LOCATION.

10 ACCESS PLATFORM
1" = 1'-0"

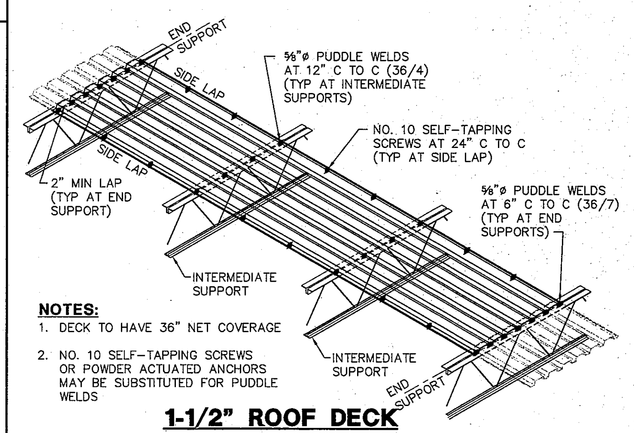

NOTES:
1. DECK TO HAVE 36" NET COVERAGE
2. NO. 10 SELF-TAPPING SCREWS OR POWDER ACTUATED ANCHORS MAY BE SUBSTITUTED FOR PUDDLE WELDS

1-1/2" ROOF DECK

6 TYP ROOF DECK ATTACHMENT
NTS

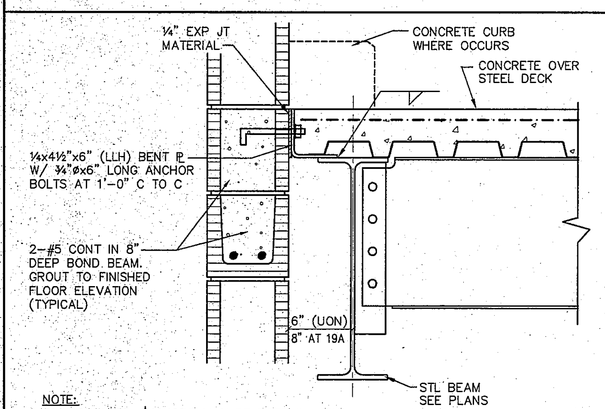

NOTE:
¾"ø GROUTED ANCHORS MAY BE USED IN LIEU OF ANCHOR BOLTS AT CONTRACTORS OPTION

19 FLOOR SLAB EDGE
NTS

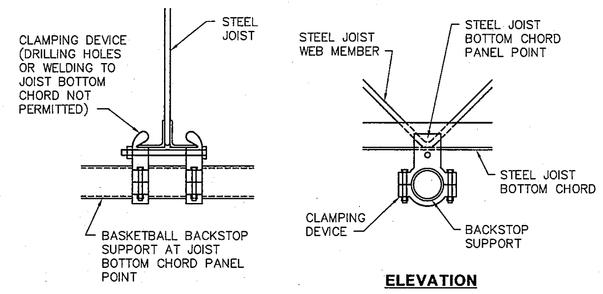

11 BACKSTOP SUPPORT
1½" = 1'-0"

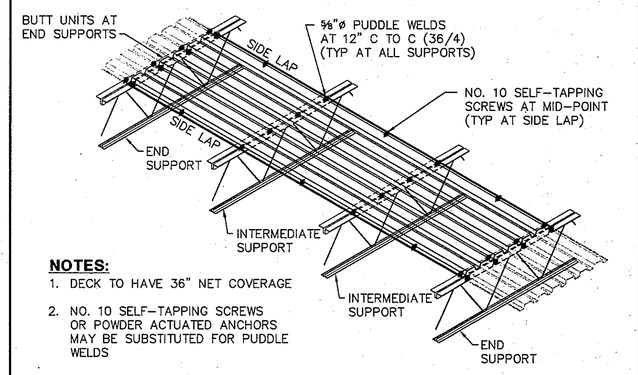

NOTES:
1. DECK TO HAVE 36" NET COVERAGE
2. NO. 10 SELF-TAPPING SCREWS OR POWDER ACTUATED ANCHORS MAY BE SUBSTITUTED FOR PUDDLE WELDS

7 TYPICAL COMPOSITE FLOOR DECK ATTACHMENT
NTS

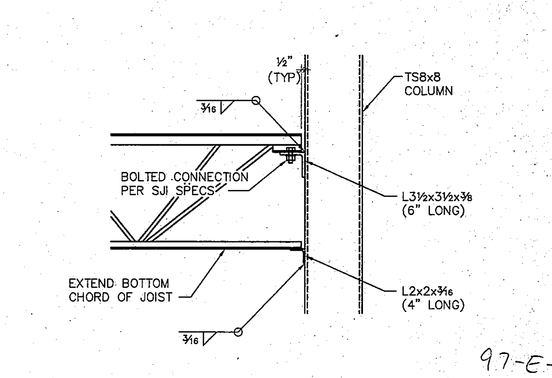

97-E-49

4 JOIST CONNECTION AT COLUMN
1" = 1'-0"

COPYRIGHT 1997 BY FANNING/HOWEY ASSOCIATES, INC.

GERALD E. KNYCH REGISTERED No. 11847 STATE OF INDIANA PROFESSIONAL ENGINEER

LEE BROCKMAN REGISTERED No. 7866 STATE OF INDIANA ARCHITECT

THE NEW
CHESTERTON HIGH SCHOOL
FOR THE
DUNELAND SCHOOL CORPORATION
CHESTERTON, INDIANA

Fanning/Howey Associates, Inc.
Architects Engineers Consultants

FRAMING DETAILS

DRAWN BY: B.A.M. COMM. NO.: 95067.00
CHECKED BY: D.D.F. DATE: APRIL 21, 1997

REVISIONS NO. DATE

S2.28

CHESTERTON HIGH SCHOOL
95067.00

D:\95067_00\STRC\S228- Thu Apr 17 17:42:00 1997 Jeff Ensan