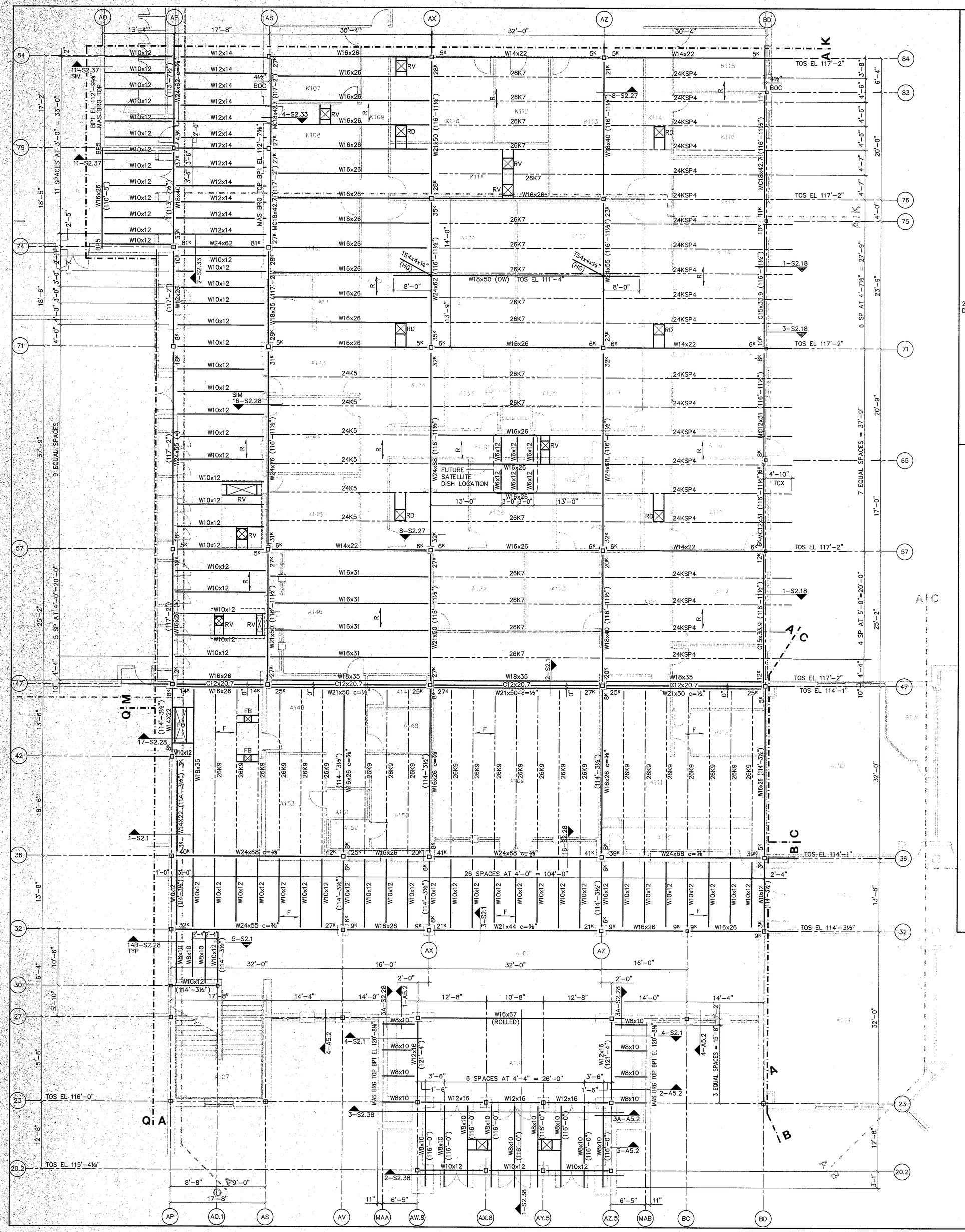

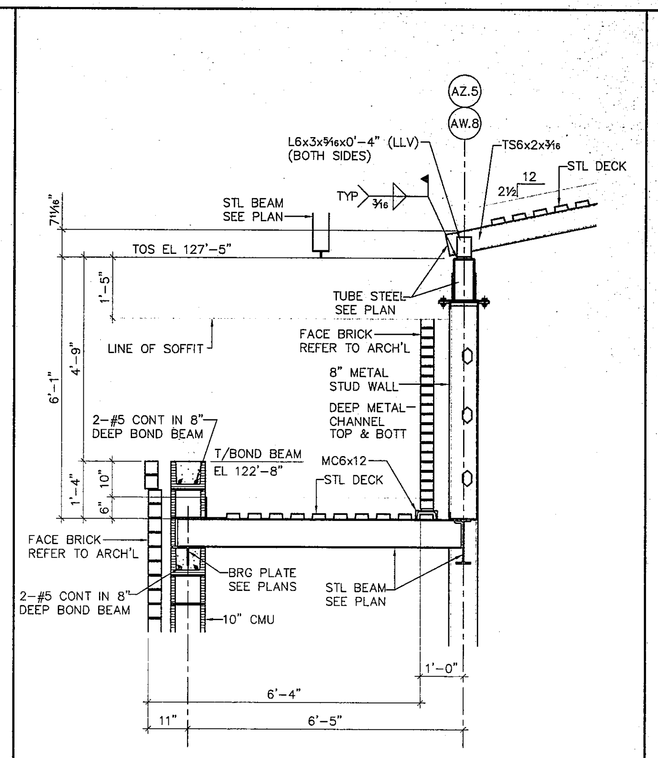

4 **WALL SECTION**
½" = 1'-0"

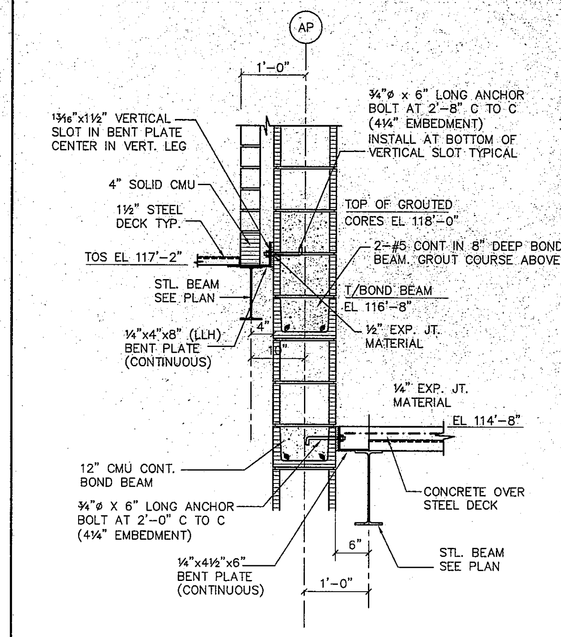

1 **WALL SECTION**
¾" = 1'-0"

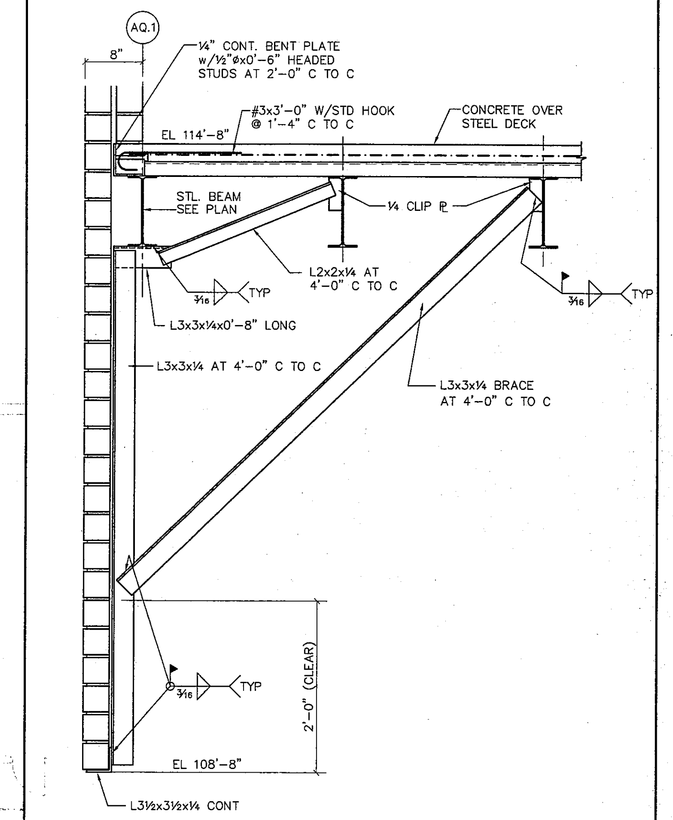

5 **SECTION AT LANDING**
1" = 1'-0"

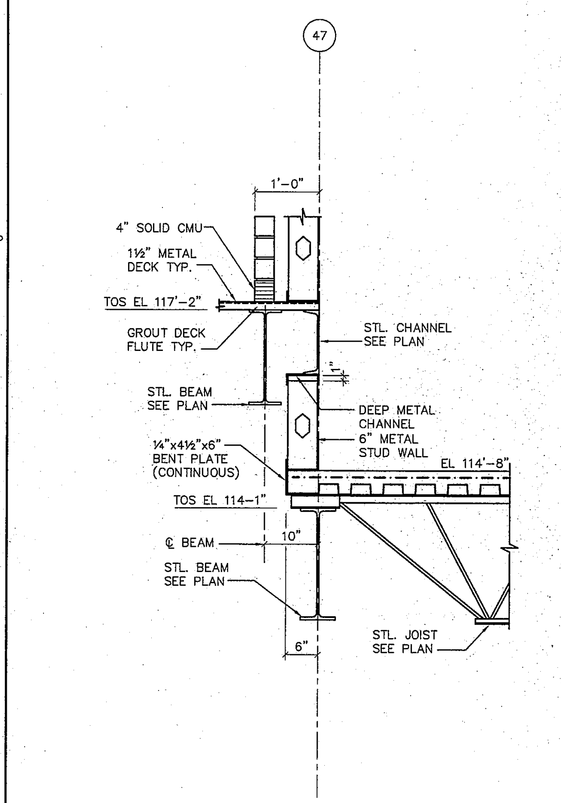

2 **WALL SECTION**
¾" = 1'-0"

FRAMING PLAN NOTES:

1. TOP STEEL EL 114'-0½" U.O.N.
2. SEE DRAWINGS S2.27 AND S2.28 FOR TYPICAL STEEL FRAMING DETAILS
3. SEE S2.27 FOR TYPICAL STEEL FRAMING CONNECTIONS
4. JOIST SPACING "MIRRORED" AT HIP AND VALLEY BEAMS, UON
5. BEAM LEGEND

(*)	INDICATES DECK SUPPORT REQUIRED BETWEEN JOISTS. SEE 6-S2.27
BOC	INDICATES BACK OF CHANNEL. SEE 15-S2.28
(OW)	INDICATES BEAM SUPPORTING OPERABLE WALL. COORDINATE LOCATION AND SIZE OF HOLES IN BOTTOM FLANGE OF BEAM WITH OPERABLE WALL SUPPLIER
(BCX)	INDICATES THAT THE BOTTOM CHORD OF THE JOIST IS TO BE EXTENDED AND ATTACHED TO THE BOTTOM FLANGE OF THE BEAM OR CHANNEL. SEE 10-S2.27
(BC)	INDICATES BOLTED CONNECTION AT JOIST BEARING
(HG)	INDICATES A HANGER – A COLUMN WHICH IS SUPPORTED FROM THE BOTTOM OF A BEAM. SEE 9-S2.27
RV	INDICATES FRAME REQUIRED FOR ROOF VENT SEE 11-S2.27
RD	INDICATES FRAME REQUIRED FOR ROOF DRAIN SEE 11-S2.27
RH	INDICATES FRAME REQUIRED FOR ROOF HATCH SEE 11-S2.27
FO	INDICATES FRAME REQUIRED FOR FLOOR OPENING SEE 11-S2.27
FB	INDICATES FRAME REQUIRED FOR RECESSED FLOOR BOX SEE 7-S2.37. COORDINATE SIZE AND LOCATION WITH DIVISION 16
R	INDICATES DIRECTION OF ROOF DECK SPAN
F	INDICATES DIRECTION OF FLOOR DECK SPAN

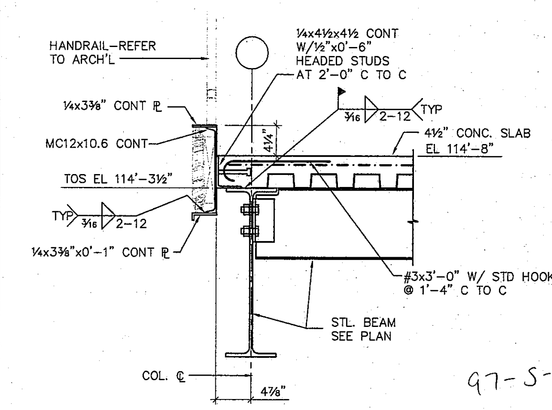

97-S-22

3 **EDGE OF DECK**
1" = 1'-0"

COPYRIGHT 1997 BY FANNING/HOWEY ASSOCIATES, INC.

THE NEW
CHESTERTON HIGH SCHOOL
FOR THE
DUNELAND SCHOOL CORPORATION
CHESTERTON, INDIANA

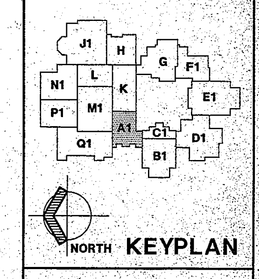

Fanning/Howey Associates, Inc.
Architects Engineers Consultants

UNIT A FLOOR FRAMING PLAN	REVISIONS NO. DATE
DRAWN BY: B.A.M. COMM. NO.: 95067.00	
CHECKED BY: D.D.F. DATE: APRIL 21, 1997	
S2.1	

CHESTERTON HIGH SCHOOL
95067.00