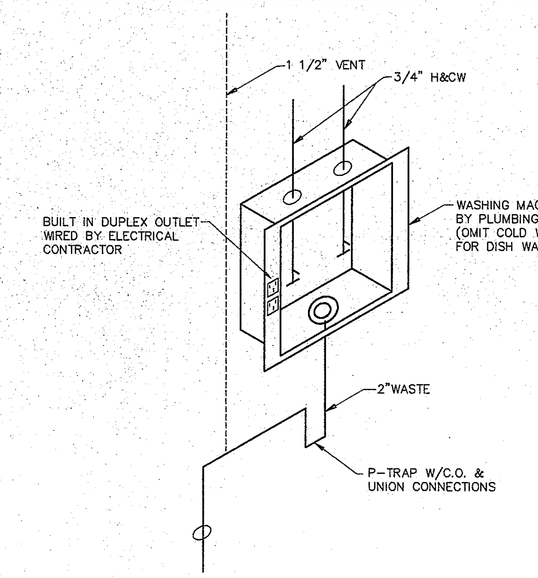

WASHING MACHINE FITTING DETAIL

NO SCALE

FIXTURE UNIT SCHEDULE

FIXTURE	QTY ✡	WASTE UNITS EACH	WASTE UNITS TOTAL	WATER UNITS EACH	WATER UNITS TOTAL
WATER CLOSET	137	6	822	10	1370
LAVATORY	141	1	141	2	282
URINAL	57	4	228	5	285
WATER COOLER	46	1	46	2	92
MOP BASIN	8	3	24	2	16
SERVICE SINK	22	3	66	2	44
SINK	260	2	520	2	520
SHOWER HEAD	106	2	212	4	424
FLOOR DRAIN	210	3	0	630	0
FLOOR SINK	11	3	33	0	0
WASH FOUNTAIN	8	3	24	4	32
WASHER	4	2	8	2	8
TOTALS			2754		3073

✡FOR REFERENCE ONLY

PLUMBING FIXTURE SCHEDULE

FIXTURE MARK	ITEM	MFGR.	MODEL	TYPE	MATERIAL	COLOR	TRIM ITEM	TRIM MFGR.	TRIM MODEL	ACCESSORIES ITEM	ACCESSORIES MFGR.	ACCESSORIES MODEL	COMMENTS
WC	WATER CLOSET	AM STD	2257.103	WALL MTD	VIT CHINA	WHITE	FLUSH VALVE	ZURN	ZR-6000XL-WS1	SEAT	OLSONITE	95	(1) W/CARRIER – SEAT TO HAVE STAINLESS STEEL CHECK HINGE – COLOR WHITE
UR	URINAL	AM STD	6541.132	WALL MTD	VIT CHINA	WHITE	FLUSH VALVE	ZURN	ZR-6003XL-WS1				(1)
L-1	LAVATORY	AM STD	0355.012	WALL MTD	VIT CHINA	WHITE	FAUCET	AM STD	6518.2DC.002	STRAINER	AM STD	2411.015.002	(1) W/CARRIER
L-2	LAVATORY	AM STD	0355.012	WALL MTD	VIT CHINA	WHITE	FAUCET	AM STD	6518.2DC.002	STRAINER	AM STD	7723.018.002	(1)(2) W/CARRIER
L-3	LAVATORY	AM STD	0476.028	SELF RIM	VIT CHINA	WHITE	FAUCET	AM STD	5401.102V.002				(1)
L-4	LAVATORY	AM STD	0476.028	SELF RIM	VIT CHINA	WHITE	FAUCET	AM STD	6518.2DC.002	STRAINER	AM STD	2411.015.002	(1)(2)
L-5	LAVATORY	AM STD	0476.028	SELF RIM	VIT CHINA	WHITE	FAUCET	AM STD	6518.2DC.002	STRAINER	AM STD	7723.018.002	(1)
L-6	LAVATORY	AM STD	0355.012	WALL MTD	VIT CHINA	WHITE	FAUCET.	AM STD	5402.172V.002				(1)
DF/CUSP	DRINKING FOUNTAIN	ELKAY	EDFC-211-C	SEMI-RECESSED	STAINLESS					BOTTOM COVER	ELKAY	CP-11	(1)
DF	DRINKING FOUNTAIN	ELKAY	EDF-10-C	WALL MTD	STAINLESS					BOTTOM COVER	ELKAY	CP-10	(1)
DF-1	DRINKING FOUNTAIN	ELKAY	EDFPW-114-C	WALL MTD	STAINLESS								(1)
DF-2	DRINKING FOUNTAIN	ELKAY	EDFP-117-C	WALL MTD	STAINLESS								
DWC	WATER COOLER	ELKAY	EBFSA-8	WALL MTD	VINYL	BY ARCH	———						
FSSK-1	FLOOR SERVICE SINK	FIAT	MSB-2424	FL MTD	MOLDED	STANDARD	FAUCET	CHICAGO	897				W/MOP RACK, RIM GUARD, STRAINER, HOSE & HOSE BRACKET
FSSK-2	FLOOR SERVICE SINK	FIAT	MSB-3624	FL MTD	MOLDED	STANDARD	FAUCET	CHICAGO	897				W/MOP RACK, RIM GUARD, STRAINER, HOSE & HOSE BRACKET
SSK	SERVICE SINK	AM STD	7695.018	WALL MTD	ENAM CI	WHITE	FAUCET	AM STD	8340.242	STANDARD	AM STD	7798.176	
S-1	SINK	ELKAY	LR-2219	SELF RIM	STAINLESS	———	FAUCET	ELKAY	LK-2432	STRAINER	ELKAY	LK-35	
S-2	SINK	ELKAY	LR-2219	SELF RIM	STAINLESS	———	FAUCET	AM STD	6275.000.002	STRAINER	ELKAY	LK-35	
S-3	SINK AND TRIM BY EQUIPMENT CONTRACTOR – RISERS, STOPS, TRAP AND TAILPIECE BY PLUMBING CONTRACTOR												
S-4	SINK	ELKAY		SELF RIM	STAINLESS	———	FAUCET	ELKAY	LK-232-S-BH-S	STRAINER	ELKAY	LK-35	(1)(2)
S-5	SINK	ELKAY	LR-3321	SELF RIM	STAINLESS	———	FAUCET	ELKAY	LK-2432	STRAINER	ELKAY	(2)LK-35	
S-6	SINK	ELKAY	LRAD-3321-55-3	SELF RIM	STAINLESS	———	FAUCET	ELKAY	LK-232-S-BH-S	STRAINER	ELKAY	(2)LK-35	(1)(2)
S-7	SINK	ELKAY	LTR-4622	SELF RIM	STAINLESS	———	FAUCET	ELKAY	(2)LK-2432	STRAINER	ELKAY	(3)LK-35	
S-8	SINK	ELKAY	LR-2522	SELF RIM	STAINLESS	———	FAUCET	ELKAY	LKC-2433	STRAINER	ZURN	Z-8749	(3) W/ZURN Z-1180 PLASTER TRAP
S-9	SINK	ELKAY	LRAD-2522-55-3	SELF RIM	STAINLESS	———	FAUCET	ELKAY	LKC-2433	STRAINER	ZURN	Z-8749	(3) W/ZURN Z-1180 PLASTER TRAP
S-10	LAUNDRY SINK	FIAT	DL-1	DROP IN	MOLDED	WHITE	FAUCET	AM STD	7573.140.002				
S-11	LAUNDRY SINK	FIAT	FLTD	FL MTD	MOLDED	WHITE	FAUCET	AM STD	7573.140.002				
S-12	LAUNDRY SINK	FIAT	SF-1-F	FL MTD	MOLDED	WHITE	FAUCET	AM STD	7573.140.002				
S-13	SINK	ELKAY	LR-2522	SELF RIM	STAINLESS	———	FAUCET	ELKAY	LKC-2433	STRAINER	ZURN	Z-8749	(3)
S-14	SINK	ELKAY	LRAD-2522-55-3	SELF RIM	STAINLESS	———	FAUCET	ELKAY	LKC-2433	STRAINER	ZURN	Z-8749	(3)
WF	WASH FOUNTAIN	BRADLEY	2939AST-NSD	WALL MTD	MOLDED	BY ARCH	———						
SH-1	SHOWER	BRADLEY	1PA/6'-0"/TF/SX/ST		STAINLESS	CHROME							MOUNT HEADS @ 6'-0" ABOVE FLOOR
SH-2	SHOWER	BRADLEY	1WCA/6'-0"/TF/SX/S/SHV		STAINLESS	CHROME							MOUNT HEADS @ 6'-0" ABOVE FLOOR
SH-3	SHOWER	BRADLEY	HN50-II/A'-0"/W/S/SH/S/SHV		STAINLESS	CHROME							MOUNT HEADS @ 6'-0" ABOVE FLOOR
SH-4	SHOWER	BRADLEY	1PA-HN600/6'-0"/TF/LH/S		STAINLESS	CHROME							MOUNT HEADS @ 6'-0" ABOVE FLOOR
SH-5	SHOWER	BRADLEY	1PA-HN600/6'-0"/TF/RH/S		STAINLESS	CHROME							MOUNT HEADS @ 6'-0" ABOVE FLOOR
SH-6	SHOWER	BRADLEY	1C-TV-SST/ESF/SD			CHROME							MOUNT HEADS @ 6'-0" ABOVE FLOOR
SH-7	SHOWER	BRADLEY	5C/B/6'-0"/TF/SX/DG/SH/ST		STAINLESS	CHROME							MOUNT HEADS @ 6'-0" ABOVE FLOOR
BL-1	BLENDER	LEONARD	TM-186-5015-PRV-SAT-BWE-REC										MOUNT CONTROLS @ 5'-0" ABOVE FLOOR
BL-2	BLENDER.	LEONARD	TM-186-8015-PRV-SAT-BWE-REC										MOUNT CONTROLS @ 5'-0" ABOVE FLOOR

① REFER TO ENLARGED TOILET PLANS FOR VARIOUS MOUNTING HEIGHTS.

② USE OFFSET TAILPIECE FOR HANDICAPPED ACCESSIBLE MOUNTING HEIGHT, TRAP TO BE INSTALLED PARALLEL TO WALL, OFFSET ROUGH-IN AS REQUIRED.

③ USE OFFSET TAILPIECE. REFER TO ARCHITECTURAL DETAIL 15-A7.29

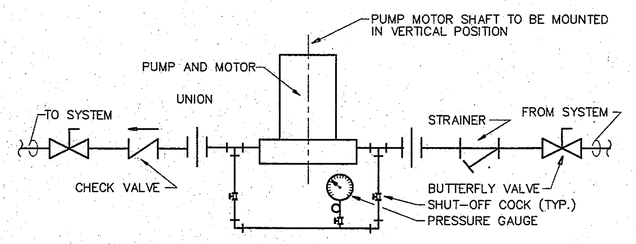

INLINE PUMP PIPING DETAIL

NO SCALE

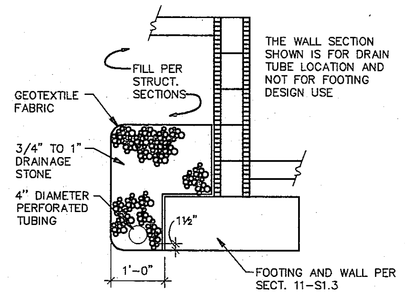

PERF. DRAIN TILE DETAIL

NO SCALE

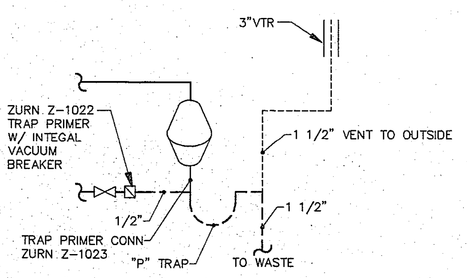

OPEN SITE DRAIN DETAIL

NO SCALE

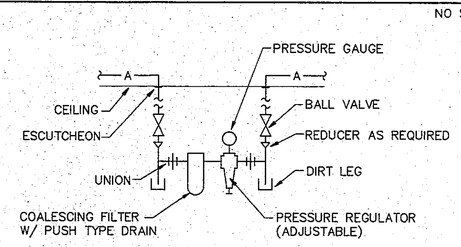

NOTE:

1. MOUNT ASSEMBLY @ 60" ABOVE FINISH FLOOR.
2. ANCHOR PIPING AND REGULATOR ASSEMBLY TO WALL AS REQUIRED.
3. PAINT ALL EXPOSED PIPING WITH BLUE ENAMEL.

COMPRESSED AIR PRESSURE REGULATOR PIPING DETAIL

NO SCALE

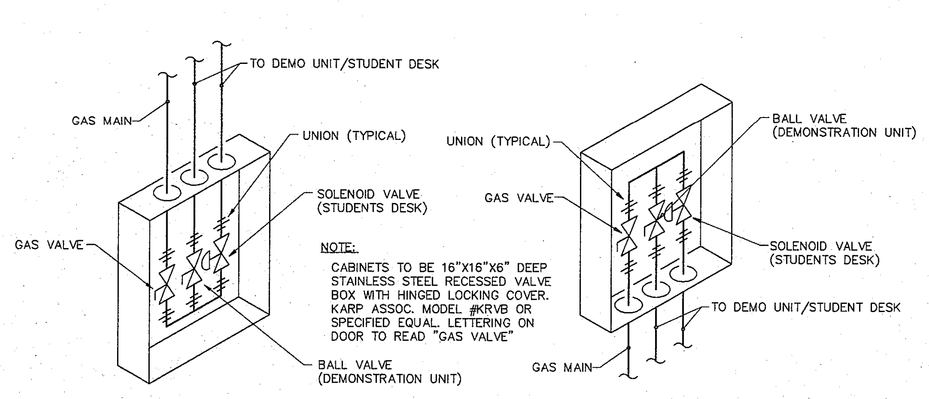

NOTE:
CABINETS TO BE 16"X16"X6" DEEP STAINLESS STEEL RECESSED VALVE BOX WITH HINGED LOCKING COVER. KARP ASSOC. MODEL #KRVB OR SPECIFIED EQUAL. LETTERING ON DOOR TO READ "GAS VALVE"

GAS VALVE CABINET DETAIL

NO SCALE

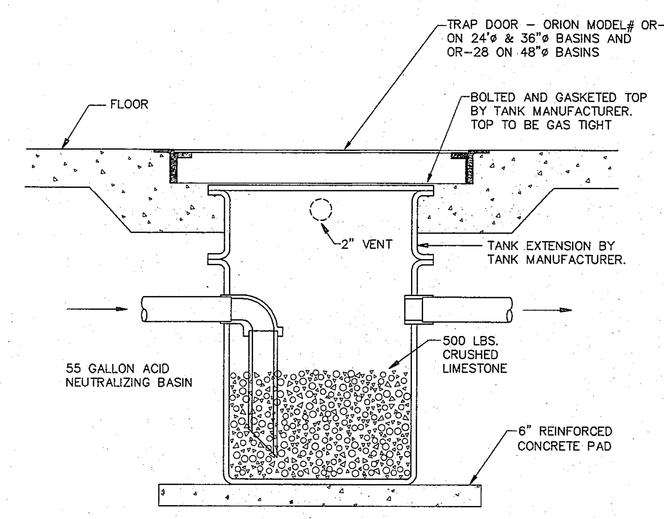

ACID NEUT. BASIN DETAIL

NO SCALE

NATURAL GAS PRESSURE REGULATOR SCHEDULE		
MARK	LOCATION	MAX. CAPACITY CU/FT
PR-B1	B115	510
PR-E1	E125	510
PR-G1	G130	910
PR-G2	G121	500
PR-G3	G121	80
PR-H1	H103	1522
PR-H2	H201	1045
PR-H3	H120	4140
PR-L1	L118	500
PR-Q1	Q201	2520
PR-R1	R129	1150
PR-S1	S113	1400
PR-T1	T101	84
PR-U1	U101	84
PR-V1	V103	84

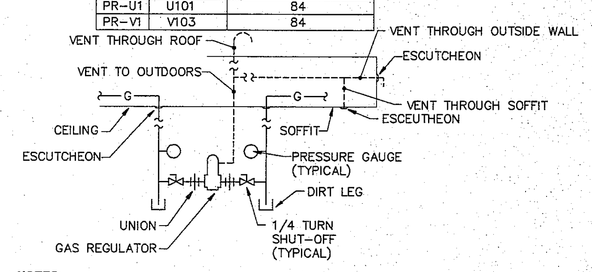

NOTES:

1. REFER TO TYPICAL PIPING DETAIL ABOVE FOR MOUNTING AND PIPING REQUIREMENTS.
2. INLET PRESSURE = 2 PSIG.
3. OUTLET PRESSURE = 7"WC
4. VENT EACH REGULATOR TO THE EXTERIOR OF THE BUILDING. VENT THROUGH ROOF, OUTSIDE WALL OR SOFFIT.

NATURAL GAS PRESSURE REGULATOR PIPING DETAIL

NOT TO SCALE

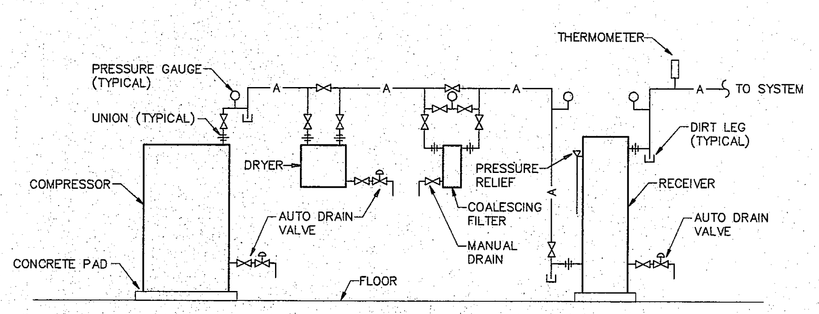

NOTE:
PIPE ALL DRAINS TO NEAREST FLOOR DRAIN

COMPRESSED AIR PIPING DIAGRAM

NO SCALE

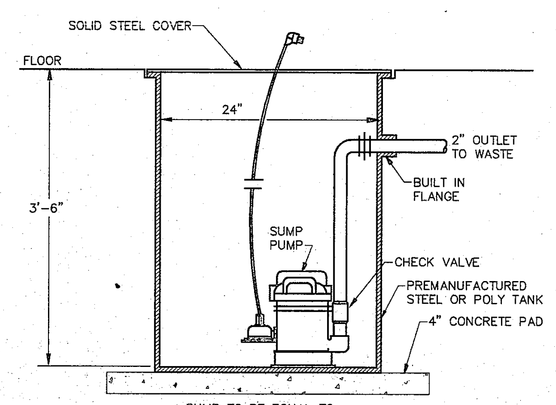

PUMP TO BE EQUAL TO WEIL MODEL 1400, 1/3 HP, 40 GPM @ 28' TDH, 1750 RPM

ELEVATOR SUMP PUMP DETAIL

NO SCALE

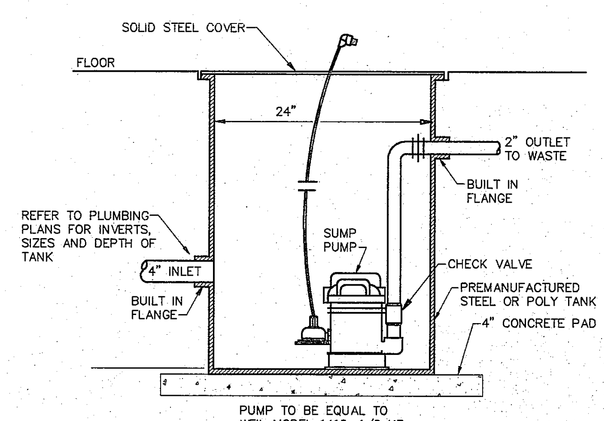

PUMP TO BE EQUAL TO WEIL MODEL 1410, 1/2 HP, 40 GPM @ 28' TDH, 1750 RPM

SUMP PUMP DETAIL

NO SCALE

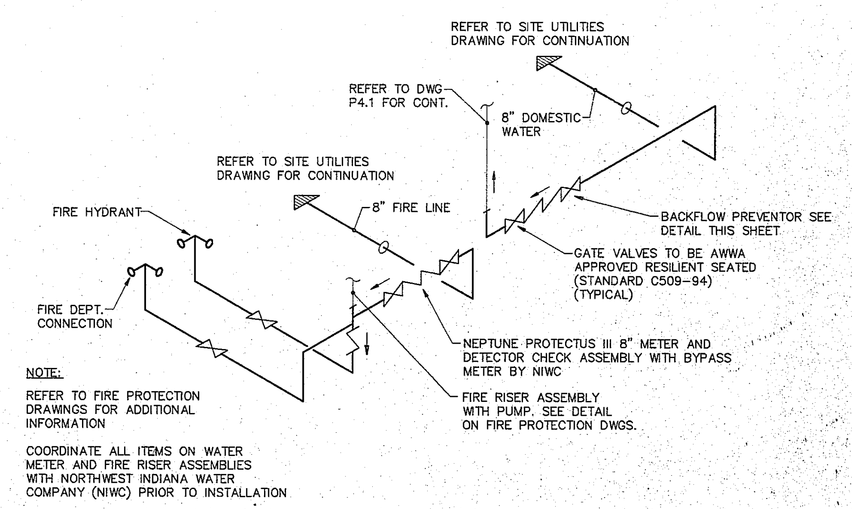

NOTE:
REFER TO FIRE PROTECTION DRAWINGS FOR ADDITIONAL INFORMATION

COORDINATE ALL ITEMS ON WATER METER AND FIRE RISER ASSEMBLIES WITH NORTHWEST INDIANA WATER COMPANY (NIWC) PRIOR TO INSTALLATION

FIRE ASSEMBLY/B.F. PREVENTOR DETAIL

NO SCALE

97-P-32

COPYRIGHT 1997 BY FANNING/HOWEY ASSOCIATES, INC.

THE NEW
CHESTERTON HIGH SCHOOL
FOR THE
DUNELAND SCHOOL CORPORATION
CHESTERTON, INDIANA

Fanning/Howey Associates, Inc.
Architects Engineers Consultants

SCHEDULES AND DETAILS

DRAWN BY: JJD
CHECKED BY: CAM
COMM. NO.: 95067.00
DATE: APRIL 21, 1997
REVISIONS NO. DATE

P3.1

CHESTERTON HIGH SCHOOL
95067.00