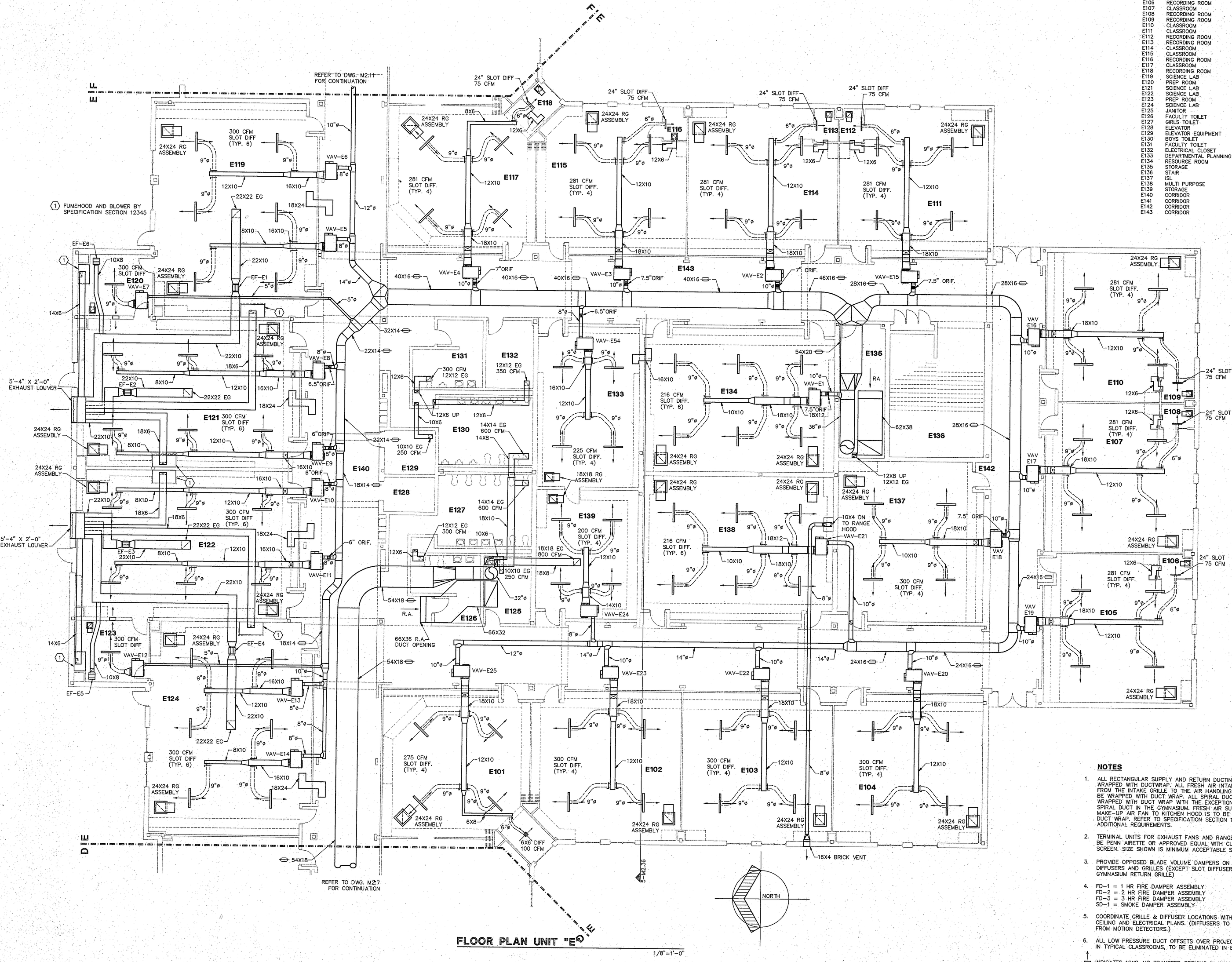

FLOOR PLAN UNIT "E"

1/8"=1'-0"

ROOM LEGEND "E1"

ROOM NO.	ROOM NAME	AREA S.F.	CEILING HEIGHT
E101	CLASSROOM	996	11'-8"
E102	CLASSROOM	959	VARIES
E103	CLASSROOM	972	VARIES
E104	CLASSROOM	967	VARIES
E105	CLASSROOM	929	VARIES
E106	RECORDING ROOM	33	9'-4"
E107	CLASSROOM	934	VARIES
E108	RECORDING ROOM	33	9'-4"
E109	RECORDING ROOM	33	9'-4"
E110	CLASSROOM	929	VARIES
E111	CLASSROOM	929	VARIES
E112	RECORDING ROOM	33	9'-4"
E113	RECORDING ROOM	33	9'-4"
E114	CLASSROOM	934	VARIES
E115	CLASSROOM	921	VARIES
E116	RECORDING ROOM	35	9'-4"
E117	CLASSROOM	958	11'-8"
E118	RECORDING ROOM	35	9'-4"
E119	SCIENCE LAB	1512	VARIES
E120	PREP ROOM	200	9'-4"
E121	SCIENCE LAB	1437	VARIES
E122	SCIENCE LAB	1437	VARIES
E123	PREP ROOM	200	9'-4"
E124	SCIENCE LAB	1508	VARIES
E125	JANITOR	143	9'-4"
E126	FACULTY TOILET	177	9'-4"
E127	GIRLS TOILET	375	9'-4"
E128	ELEVATOR	79	9'-4"
E129	ELEVATOR EQUIPMENT	100	9'-4"
E130	BOYS TOILET	355	9'-4"
E131	FACULTY TOILET	177	9'-4"
E132	ELECTRICAL CLOSET	143	----
E133	DEPARTMENTAL PLANNING	717	9'-4"
E134	RESOURCE ROOM	1203	VARIES
E135	STORAGE	271	9'-4"
E136	STAIR	453	----
E137	ISL	1018	VARIES
E138	MULTI PURPOSE	1203	VARIES
E139	STORAGE	574	9'-4"
E140	CORRIDOR	2238	10'-0"
E141	CORRIDOR	1826	10'-0"
E142	CORRIDOR	977	10'-0"
E143	CORRIDOR	1803	10'-0"

NOTES

1. ALL RECTANGULAR SUPPLY AND RETURN DUCTING IS TO BE WRAPPED WITH DUCTWRAP. ALL FRESH AIR INTAKE DUCTING FROM THE INTAKE GRILLE TO THE AIR HANDLING UNIT IS TO BE WRAPPED WITH DUCT WRAP. ALL SPIRAL DUCTING IS TO BE WRAPPED WITH DUCT WRAP WITH THE EXCEPTION OF THE EXPOSED SPIRAL DUCT IN THE GYMNASIUM. FRESH AIR SUPPLY DUCT FROM MAKE-UP AIR FAN TO KITCHEN HOOD IS TO BE WRAPPED WITH DUCT WRAP. REFER TO SPECIFICATION SECTION 15250 FOR ADDITIONAL REQUIREMENTS.
2. TERMINAL UNITS FOR EXHAUST FANS AND RANGE HOODS TO BE PENN AIRETTE OR APPROVED EQUAL WITH CURB & BIRD SCREEN. SIZE SHOWN IS MINIMUM ACCEPTABLE SIZE.
3. PROVIDE OPPOSED BLADE VOLUME DAMPERS ON ALL SUPPLY DIFFUSERS AND GRILLES (EXCEPT SLOT DIFFUSERS AND GYMNASIUM RETURN GRILLE)
4. FD-1 = 1 HR FIRE DAMPER ASSEMBLY
   FD-2 = 2 HR FIRE DAMPER ASSEMBLY
   FD-3 = 3 HR FIRE DAMPER ASSEMBLY
   SD-1 = SMOKE DAMPER ASSEMBLY
5. COORDINATE GRILLE & DIFFUSER LOCATIONS WITH REFLECTED CEILING AND ELECTRICAL PLANS. (DIFFUSERS TO BE MIN. 4'-0" FROM MOTION DETECTORS.)
6. ALL LOW PRESSURE DUCT OFFSETS OVER PROJECTION SCREENS IN TYPICAL CLASSROOMS, TO BE ELIMINATED IN BASE BID.

INDICATES 16X8 AIR TRANSFER OPENING IN WALL

97-M-10

COPYRIGHT 1997 BY FANNING/HOWEY ASSOCIATES, INC.

DOUGLAS M. WICKSTROM REGISTERED STATE OF INDIANA ARCHITECT

LEE BROCKSMITH REGISTERED No. 7366 STATE OF INDIANA ARCHITECT

THE NEW
CHESTERTON HIGH SCHOOL
FOR THE
DUNELAND SCHOOL CORPORATION
CHESTERTON, INDIANA

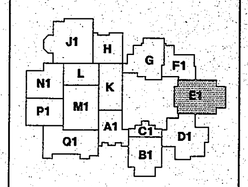

Fanning/Howey Associates, Inc.
Architects Engineers Consultants

VENTILATION PLAN UNIT "E"

DRAWN BY: SCB	COMM. NO.: 95067.00	REVISIONS NO.	DATE
CHECKED BY: CAM	DATE: APRIL 21, 1997		

M2.9

CHESTERTON HIGH SCHOOL
95067.00