INSTALLATION REQUIREMENTS

FOODSERVICE EQUIPMENT CONTRACTOR'S REQUIREMENTS

F1 Provide drawings to appropriate trades referencing utility service and coordinate final connection.

F2 Deliver, assemble and install AVTEC System per drawing.

F3 Furnish wiring (and plumbing) diagrams to end user.

F4 The K.E.C. must inform AVTEC of any changes in equipment or building structure. Field modifications due to insufficient information are the responsibility of the K.E.C.

ELECTRICAL SERVICE EQUIPMENT CONTRACTOR'S REQUIREMENTS

BUILDING SERVICES

INSTALL ELECTRICAL SERVICE K.O., CONDUIT, WIRING, AND OVERCURRENT PROTECTION DEVICE RATED AT A CONTINUOUS OPERATING LOAD OF:

E5 20 AMPS, 120 VAC, 1ø, 60Hz (1 HP CONVEYOR MOTOR REQ'D) FROM STUB IN LOCATION AT FLOOR APPROXIMATELY 12" A.F.F. TO CONTROL BOX SERVICE LEADS.

FIELD INTERCONNECTIONS

E3 PROVIDE AND INSTALL 3-WIRE CIRCUIT FROM REMOTE STOP/START STATIONS TO MAIN CONTROL PANEL.

PLUMBING CONTRACTOR'S REQUIREMENTS

BUILDING SERVICES

PROVIDE AND INSTALL SERVICE SUPPLY PIPES FROM ROUGH IN LOCATION AT FLOOR TO PIPES APPROX. 12" A.F.F.

P1 1-1/2" NPT WASTE REQUIRED AS SHOWN IN PLAN VIEW AND UTILITY ROUGH IN DETAIL BELOW.

P2 1/2" NPT HOT WATER SUPPLY, 40 psig MAX.

P3 1/2" NPT COLD WATER SUPPLY, 40 psig MAX.

UTILITY ROUGH IN LOCATIONS

REFER TO PLAN VIEW FOR ADDITIONAL DRAIN LOCATIONS IF REQUIRED.

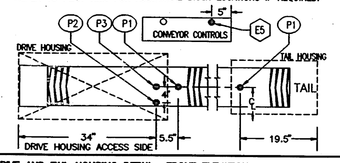

DRIVE AND TAIL HOUSING DETAIL FRONT ELEVATION

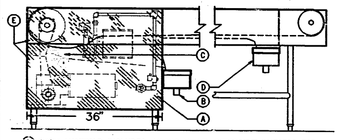

A) WASH MANIFOLD INCLUDES: MIXING VALVE, DETERGENT INJECTOR TEE, LINE STRAINER, VACUUM BREAKER, AND WATER SOLENOID.
B) DRIVE HOUSING DRAIN SUMP WITH REMOVABLE SCRAP BASKET AND 1-1/2" DRAIN.
C) CONVEYOR DRIVE INCLUDES AUTOMATIC CHAIN TENSIONER.
D) TAIL HOUSING DRAIN SUMP WITH REMOVABLE SCRAP BASKET AND 1-1/2" DRAIN (ONLY PROVIDED WITH SIDE FLEXING BELT (MODELS CBHW) CONVEYORS
E) REMOVABLE SERVICE ACCESS PANEL, MECHANICALY FASTENED.

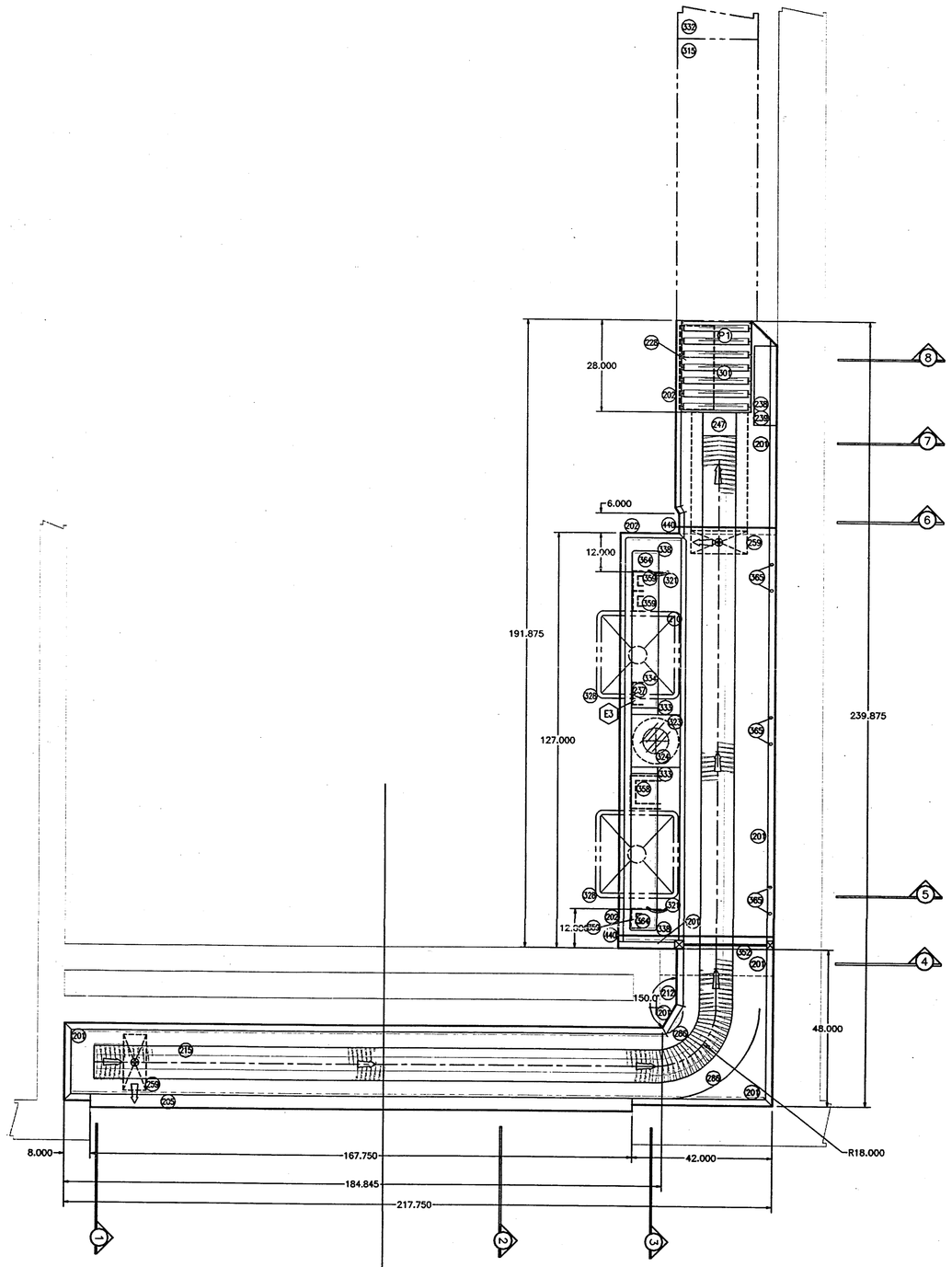

PLAN VIEW 82

SCALE: 1/2" = 1'-0" ITEM #14

ALL DIMENSIONS SH[illegible]ENSIONS.
OVERALL EQUIPMENT DIMENSIONS ARE ± 1/4".
CONSTRUCT WALLS TO SUIT EQUIPMENT DIMENSIONS.

CBSW-A

LEGEND

201 2" BACKSPLASH
202 1 1/2" ROLLED EDGE
205 S/S WINDOW SILL (BY AVTEC)
210 TRANSFER EDGE: RETURN (PULL-BACK EDGE)
212 WALL FURRING BY G.C.
215 10" OVERLAPPING CHAIN BELT
228 S/S DETERGENT TANK/PUMP HOUSING
237 START/STOP STATION (REMOTE LOCATION)
238 MOTOR CONTROL BOX (NEMA 4 CONSTRUCTION REQUIRED)
239 CONVEYOR CONTROLS (SEE DETAIL)
247 ANTI-JAM PLATE
259 REMOVABLE SCRAP BASKET
286 S/S GUIDE RAIL
301 2" DIA. ROLLERS ON 4" (NOMINAL) CENTERS IN REMOVABLE SECTIONS
315 RACK-TYPE DISHMACHINE (BY OTHERS)
321 PRE-RINSE FAUCET (BY AVTEC)
323 RINSE SINK W/ CONNECTING SCRAP TROUGH
324 S/S SINK COVER PLATE W/ (2) LIFT HOLES (SEE DETAIL)
328 SILVER SOAK SINK (BY OTHERS)
332 CLEAN DISH TABLE (BY OTHERS)
333 SILVER SAVER (SEE DETAIL)
334 SCRAP TROUGH
338 TROUGH FLUSH NOZZLE KNOCK-OUTS (BY AVTEC)
352 S/S DOUBLE-PAN SLIDE-UP SECURITY DOOR FILLED W/ SOUND-DEADENING MATERIAL
358 DISPOSER CONTROL BRACKET, SEE ENG. NOTES FOR MFG./MODEL NO.
359 MIXING VALVE BRACKET, SEE ENG. NOTES FOR VALVE MFG./MODEL NO.
364 1-1/2" NPT TROUGH NOZZLE BY AVTEC
365 VACUUM BREAKER KNOCK-OUT(S) BY AVTEC (SEE ENG. NOTES FOR MFG./MODEL NO.)
440 PHOTOELECTRIC LIMIT SWITCH (SEE DETAIL)

☒ CHECKED AND FORWARDED TO A/E
☐ REVISE AND RESUBMIT
☐ INSUFFICIENT INFORMATION

[illegible] and compliance with the [illegible] Contractor is [illegible] and complied [illegible] responsibility solely to the [illegible] of construction and for construction of [illegible] of all trades.

BY MPJ
DATE 2/4/98
CONSTRUCTION CONTROL
FORT WAYNE, INDIANA

This Contractor's submittal has been reviewed for general compliance with the contract documents. Contractor is responsible for dimensions, and compliance with design requirements.

☐ NO EXCEPTIONS TAKEN ☑ NOTE MARKINGS / CONFIRM
☐ REJECTED ☐ NOTE MARKINGS / RESUBMIT

By: [signature] Date: 3.12.98
VORNDRAN & ASSOCIATES
Food Service Consultants

SPECIAL NOTE(S)

- REFER TO DRAWING #3 FOR SECTION AND DETAIL DRAWINGS

ENGINEERING/MANUFACTURING NOTES

- NOTE LAMINATED PANEL REQUIREMENTS (SEE DETAIL)
- NOTE DUAL MOMENTARY LIMIT SWITCHES
- SOLID, FLUSH SINK COVER-PLATE PROVIDED BY AVTEC
- ALL CORNERS 3/4" RADII W/ BULLNOSED (WHERE APPL.)
- NOTE REQUIRED KNOCK-OUTS FOR TROUGH NOZZLES VACUUM BREAKERS BY AVTEC T & S #B-457
- TROUGH NOZZLE(S), PRE-RINSE FAUCETS AND MIXING VALVES FOR FAUCETS, PROVIDED AND MOUNTED BY AVTEC ALL PLUMBING LINES BY P.C..
  2) T&S B-523 GOOSENECK FAUCETS, W/B-512 MIX VALVES
  2) 3/4" FLUSH NOZZLES EACH END OF TROUGH, BY AVTEC
- AVTEC TO PROVIDE FOUR BRACKETS, AS SHOWN IN PLAN
  3) MIXING VALVE BRACKETS
  1) DISPOSER CONTROL BRACKET
- SILVER SAVER TO BE REMOVABLE SEE DETAIL
- REFER TO WAREWASHER MANUFACTURER SHOP DRAWING(S) FOR SPECIFICS REGARDING TABLE INTERFACE DETAIL(S).

VERIFICATIONS/FIELD NOTES

NOTE TO K.E.C.: ALL ITEMS THAT REQUIRE VERIFICATION MUST BE VERIFIED PRIOR TO RELEASE FOR FABRICATION. AVTEC CAN NOT BEGIN ENGINEERING OR FABRICATION UNTIL ALL VERIFICATIONS ARE RESOLVED.

- FIELD JOINTS ARE FULLY WELDED AND POLISHED IN FIELD BY K.E.C.
- VERIFY MAXIMUM CRATE SIZE THAT CAN ACCESS TO THE POINT OF INSTALLATION, AND REQUIRED FIELD JOINTS.
- 14" X 18" TRAY AND 20" X 20" RACKS TO BE ACCUMULATED AND/OR CONVEYED.
- VERIFY ALL WALL-TO-WALL DIMENSIONS.
- VERIFY: COLOR OF LAMINATE REQUIRED ON PANELS.
- PRIOR TO RELEASE FOR FABRICATION: PROVIDE MODEL NUMBER AND MANUFACTURER OF ANY INTERFACING EQUIPMENT. SHIP PARTS TO BE INSTALLED BY AVTEC TO OUR FACTORY. OTHERWISE, FIELD INSTALLATION AND FIT UP IS THE RESPONSIBILITY OF THE K.E.C.
- VERIFY: LOCATION AND SPACE REQUIREMENTS OF ANY EQUIPMENT (SOAK SINKS, BOOSTER HEATER, ETC.) THAT REQUIRE TABLE AND/OR LEG CLEARENCE.
- VERIFY: AVTEC WILL PRE-PUNCH HOLES FOR PLUMBING COMPONENTS AS NOTED. VERIFY IF ADDITIONAL REQ'D.
- ALL PLUMBING LINES (DRAIN OR WATER) ARE PROVIDED AND INSTALLED IN FIELD BY THE P.C.
- TROUGH NOZZLE(S), PRE-RINSE FAUCETS VAC. BRK'S. AND MIXING VALVES FOR FAUCETS, PROVIDED AND MOUNTED BY AVTEC, ALL PLUMBING LINES BY P.C..
- WAREWASHER DRAWINGS MUST BE SENT TO AVTEC PRIOR TO RELEASE FOR FABRICATION.
- HOSE REEL, MIXING VALVE, DISPOSER AND CONTROL PANEL PROVIDED AND MOUNTED BY K.E.C., ALL PLUMBING LINES BY P.C..
- REAR DROP-OFF WALL TO BE LOCATED AND CONSTRUCTED AFTER INSTALLATION OF AVTEC CONVEYOR SYSTEM. G.C./K.E.C. MUST MAINTAIN THE WALL OPENING AS SHOWN.
- FILLER SECTION/ WALL FURRING PROVIDED AND INSTALLED IN FIELD BY K.E.C./ G.C..
- SECURITY DOOR: THE SECURITY DOOR WILL BE BUILT TO THE DIMENSIONS AS SHOWN ON THE DETAIL. THE K.E.C. MUST ENSURE THAT THE WALL OPENING DIMENSIONS ARE ACCEPTABLE. ANY FIELD VARIANCES ARE THE RESPONSIBILITY OF THE K.E.C.
- PROVIDE CLEAR ACCESS TO DRIVE HOUSING AND DRAIN LOCATIONS ON AT LEAST ONE SIDE. VERIFY WHICH SIDE WILL BE ACCESSIBLE FOR EACH DRAIN LOCATION.
- BELT WASH SYSTEM REQUIRES OPERATING WATER PRESSURE OF 20 TO 40 PSIG. IF WATER PRESSURE EXCEEDS 40 PSIG A PRESSURE REDUCING VALVE IS PROVIDED AND INSTALLED BY THE P. C.
- ALL MOTOR CONTROL HOUSINGS MEET OR EXCEED NEMA 4 CONSTRUCTION.
- ALL DIMENSIONS SHOWN ARE EQUIPMENT DIMENSIONS. OVERALL EQUIPMENT DIMENSIONS ARE ± 1/4". CONSTRUCT WALLS TO SUIT EQUIPMENT DIMENSIONS.

SYMBOL KEY

PLUMBING INSTALLATION ⬡ ELECTRIC INSTALLATION ○ LEGEND △ REVISION

GENERAL CONTRACT CONDITIONS

This proposal contains proprietary design and engineering information which is the exclusive property of AVTEC Industries Inc., and may not be used, copied or reproduced in any manner without the expressed written approval of AVTEC.

All electrical and plumbing work done by AVTEC is designed, quoted and executed in compliance with all published standards of Underwriters Laboratories, Inc., the latest edition of the National Electric Code, NFPA 70, Uniform Plumbing Code, and requirements of the Occupational Safety and Health Administration, (OSHA) insofar as applicable. AVTEC does not accept any responsibility for requirements of regional and local codes that deviate from the the accepted standards of the aforecited regulatory agencies.

AVTEC is not responsible for any wiring or plumbing other than that furnished as part of our equipment. All wiring and plumbing at the installation site is the responsibility of others.

All plumbing and electrical supply lines, associated valves and breakers for AVTEC systems must be approved by mechanical and electrical engineers.

Any field work relating to modification of electrical wiring, plumbing, relocating of components on controls, and similar unforeseeable demands to meet local code requirements, is to be done by others and without back charge to AVTEC, unless these conditions were previously brought to our attention, and are expressly included and described in our written quotation. AVTEC will not honor any back charges unless written authorization has been issued by the home office prior to any work performed.

Any changes to AVTEC'S standard manufacturer required to meet local codes most probably will void U.L. Approval standard warrantee, unless prior approval in writing is granted by AVTEC.

This equipment will be constructed in accordance with dimensions shown on our specifications which must be approved prior to fabrication. Any subsequent changes which might be required must be submitted to us in writing.

AVTEC'S policy of continuous product improvement includes the right to change materials and specifications without notice.

Food Service Contractor will be responsible for service revisions to substituted equipment.

WARRANTY

AVTEC INDUSTRIES INC. Warrants to the original purchaser for use of our products, that any part thereof which proves to be defective in material or workmanship under normal use within one year from date of installation, will be replaced free of charge, labor to replace such part is warranteed for 90 days from installation.

This warranty does not apply to damage resulting from improper installation, accident, unauthorized alteration, local codes not previously brought to the attention of AVTEC, misuse or abuse.

CRATE SIZES: VERIFY BUILDING ACCESS

Installing contractor shall check all building access, entrance and field conditions to ensure sufficient clearance to allow sections(s) size(s) (as dimensioned on this drawing) to be brought into building and installed according to AVTEC recommendations.

*** ***
*** ***
*** ***

ENERGY SYSTEMS • VENTILATION • TRAY MAKE-UP

REVISIONS

SYM	DATE	DESCRIPTION	BY
*			

DRAWN BY: TK	DATE: 10-22-97
CHECKED BY:	DATE:
REFERENCE NO.: 47415	SCALE: 1/2" = 1'
DRAWING NAME: C:/22126-2	
REGIONAL SALES MANAGER: S.E.	REGION NUMBER: 400
ENGINEERING NUMBER: 22126	SHEET: 2 OF 3
REVISION: *	ITEM(S): 82

STATUS:

SUBMITTAL COPY MANUFACTURING RELEASE APPROVAL
Date: 10/28/97 ☐ Project File

We have reviewed this drawing and find it to be in compliance with the Job Specifications. All Equip. Models, Equip. Connections, Field Dimensions, Service Connections, and AVTEC Equipment interface dimensions have been verified or approved as noted.

DEALER

SIGNED DATE

AVTEC
120 KENDALL POINT DR. OSWEGO, IL 60543-8898 (630) 851-4000 (630) 851-0777 (FAX)

TITLE: CBSW/AVTEC SOILED DISH CONVEYOR SYST. WITH INTEGRAL SCRAPPING AREA AND TRANSITION TO WASHER ROLLER SECTION

PROJECT NAME: CHESTERTON HIGH SCHOOL
CHESTERTON, IN

DESIGNER: VORNDRAN ASSOCIATES
FT. WAYNE, IN

CONTRACTOR: INDIANA RESTAURANT EQUIP. CORP.
WARSAW, IN

97-NE-02