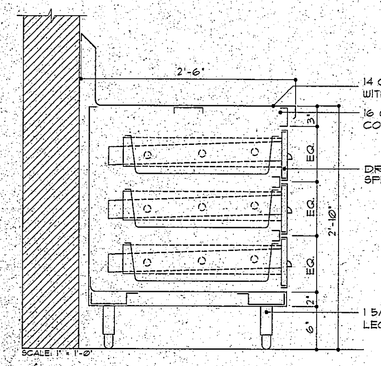

31 SS WORK TABLE
ITEM NO. 45

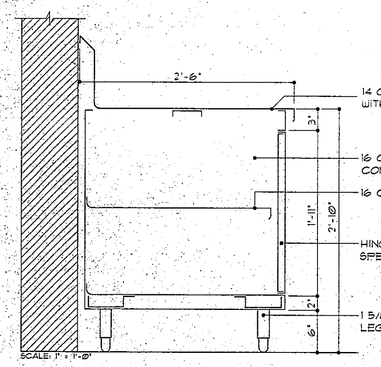

32 SS WORK TABLE
ITEM NO. 45

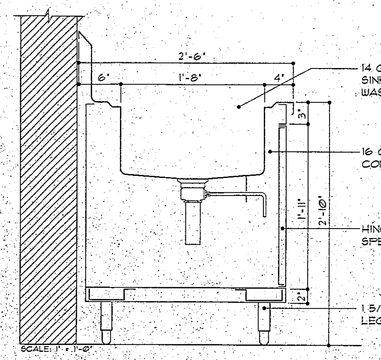

33 SS WORK TABLE
ITEM NO. 45

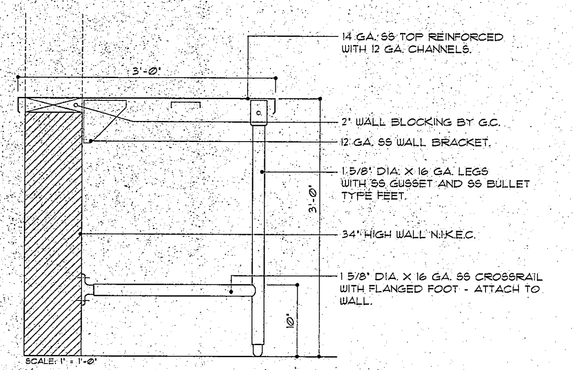

34 FAST FOOD SERVING COUNTER
ITEM NO. 44

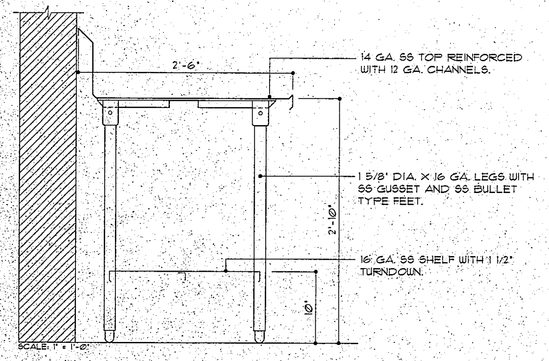

35 VEGETABLE PREP SINK
ITEM NO. 32

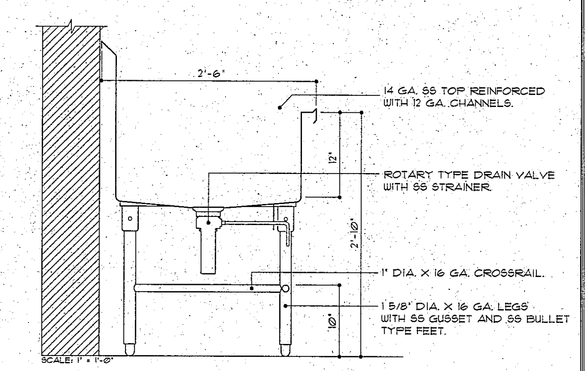

36 VEGETABLE PREP SINK
ITEM NO. 32

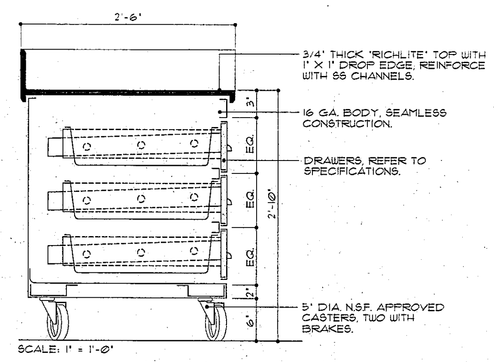

37 MOBILE BAKER'S TABLE
ITEM NO. 38

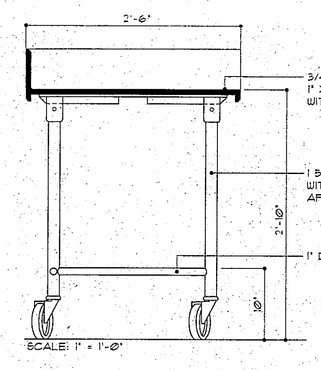

38 MOBILE BAKER'S TABLE
ITEM NO. 38

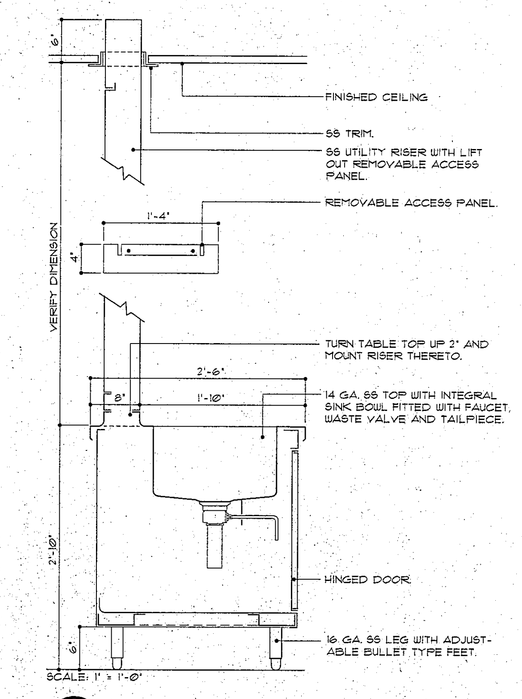

39 COOK'S TABLE
ITEM NO. 37

ELECTRICAL SCHEDULE

MARK (X)	EQUIPMENT IS ROUGHED IN FOR MANUFACTURER AND MODEL NUMBER SPECIFIED.
E1	WALK IN COOLER/FREEZER A 0.75 KW 120V-1 DROP FROM ABOVE AND CONNECT TO JUNCTION BOX ON TOP OF CEILING. DIVISION 16 WIRE FROM JB ON TOP OF UNIT CEILING TO KEC FURNISHED LIGHT FIXTURES. ALL CONDUIT AND WIRE SHALL BE INSTALLED ABOVE AND ON THE OUTSIDE OF THE UNIT CEILING. PENETRATIONS THRU THE WALLS AND CEILINGS ARE TO BE EQUIPPED WITH "SEAL-OFFS". WIRE PERIMETER DOOR HEATERS AND AIR RELIEF VENT HEATERS. HEATERS. B COOLER COIL - 21 AMP 120V-1 DROP FROM ABOVE AND CONNECT TO JUNCTION BOX ON COOLING COIL. DIVISION 16 WIRE IN "SEAL-TIGHT" CONDUIT TO KEC FURNISHED ROOM TEMPERATURE CONTROLS. C CONDUIT AND WIRES FROM J.B. ON COOLING COIL TO THE REMOTE TIMER ON THE COMPRESSOR BY DIVISION 16. D FREEZER COIL - CONDUIT AND WIRES FROM JUNCTION BOX ON FREEZER COIL TO THE COMPRESSOR. DIVISION 16 WIRE IN "SEAL TIGHT" CONDUIT TO KEC FURNISHED ROOM TEMPERATURE CONTROLS. WIRE DRAIN LINE HEATER TO FREEZER COIL "HOT" TERMINALS. REFER TO WIRING DIAGRAM. E COOLER COMPRESSOR - 1.0 HP 208V-3. DIVISION 16 CONNECT TO KEC FURNISHED DISCONNECT SWITCH ON THE COMPRESSOR. DISCONNECT SWITCH TO BE FACTORY WIRED TO THE COMPRESSOR. F FREEZER COMPRESSOR - 4.0 HP 208V-3. DIVISION 16 CONNECT TO KEC FURNISHED DISCONNECT SWITCH ON THE COMPRESSOR. DISCONNECT SWITCH TO BE FACTORY TO THE COMPRESSOR AND TIMER. REFER TO WIRING DIAGRAM
E12	PROOF CABINET 13.3 AMP 120V-1 DUPLEX RECEPTACLE FLUSH MOUNTED IN WALL 16" AF.
E14	FOOD CUTTER 0.50 HP 120V-1. SERVICE FROM ITEM 33.
E15	SLICER A 0.50 HP 120V-1. SERVICE FROM ITEM 33. B 0.50 HP 120V-1 AT CEILING. DIVISION 16 PROVIDE DROP CORD TO 78" AF.
E16	6.0 QT. MIXER 1.0 HP 480V-3. SERVICE FROM ITEM 33 AND/OR ITEM 37.
E17	20 QT. MIXER 0.50 HP 120V-1 AT CEILING. DIVISION 16 PROVIDE ELECTRIC DROP CORD TO 78" AF.
E18	DISHWASHER 46.7 AMP 480V-3. DIVISION 16 WIRE IN "SEAL-TIGHT" CONDUIT FROM ROUGH IN TO THE TERMINAL ON THE EQUIPMENT.
E19	DISPOSER 1.0 HP 480V-3, 24" AF. DIVISION 16 WIRE IN "SEAL-TIGHT" CONDUIT FROM JB IN WALL TO THE DISPOSER, SOLENOID VALVE AND CONTROL DEVICE.
E20	DISPOSER 3.0 HP 480V-3, 24" AF. DIVISION 16 WIRE IN "SEAL-TIGHT" CONDUIT FROM JB IN WALL TO THE DISPOSER, SOLENOID VALVE AND CONTROL DEVICE.
E21	CONVECTION STEAMER 4.0 AMP 120V-1. SERVICE FROM UTILITY RACEWAY, ITEM NO. 81.
E22	STATIONARY KETTLE 4.0 AMP 120V-1. SERVICE FROM UTILITY RACEWAY, ITEM NO. 81.
E23	COMBI OVEN 15.0 AMP 120V-1. SERVICE FROM UTILITY RACEWAY, ITEM NO. 81.

WORK BY DIVISION 16

ROUGH IN ELECTRICAL SERVICE THRU WALLS, FLOORS AND CEILINGS AND RUN CONDUIT AND CONDUCTORS FROM THE ROUGH IN. MAKE THE CONNECTIONS TO A TERMINAL BLOCK, TERMINAL PANEL OR JUNCTION BOX ON THE EQUIPMENT.

FURNISH AND INSTALL ALL ELECTRICAL OUTLETS IN WALLS, FLOOR AND CEILING.

FURNISH AND INSTALL ALL DISCONNECT SWITCHES AS REQUIRED FOR THE EQUIPMENT IN ACCORDANCE WITH THE ELECTRICAL CODE.

FURNISH AND INSTALL ALL CONDUIT AND WIRING BETWEEN REMOTE CONTROL PANELS AND THE FOOD SERVICE EQUIPMENT.

THE FOOD SERVICE EQUIPMENT ELECTRICAL DRAWINGS AND EQUIPMENT DATA INFORMATION ARE PREPARED FOR THE CONVENIENCE OF BIDDING AND ARE NOT INTENDED AS ROUGH IN DRAWINGS TO BE USED ON THE PROJECT SITE. REFER TO THE FOOD SERVICE EQUIPMENT CONTRACTORS ROUGH IN DRAWING FOR ACCURATE LOCATION OF UTILITIES.

VERIFY ELECTRICAL CHARACTERISTICS OF OWNER'S EXISTING EQUIPMENT WHICH IS TO BE REUSED.

ELECTRICAL SYMBOLS

▲	ROUGH IN		DISCONNECT SWITCH
(J)	JUNCTION BOX		CORD AND PLUG
(S)	SOLENOID		WIRING BY DIVISION 16
(T)	THERMOSTAT		WIRING BY KEC
(C)	CONDUIT		DUPLEX RECEPTACLE
(R)	RELAY		FLOOR RECEPTACLE
(A)	ALARM		DROP CORD
(T)	TIMER		SPECIAL PURPOSE OUTLET
	LIGHT	◦	CONNECTION ON EQUIPMENT
	SWITCH	(7)	CONNECTION NUMBER
		(9)	EQUIPMENT NUMBER

ABBREVIATIONS

DR	DUPLEX RECEPTACLE	KW	KILOWATT
SPO	SPECIAL RECEPTACLE	HP	HORSEPOWER
JB	JUNCTION BOX	V	VOLTS
DS	DISCONNECT SWITCH	SU	STUB UP
AMP	AMPERAGE	AF	ABOVE FLOOR
C/P	CORD AND PLUG	DFA	DROP FROM ABOVE

ELECTRICAL SCHEDULE

MARK (X)	EQUIPMENT IS ROUGHED IN FOR MANUFACTURER AND MODEL NUMBER SPECIFIED.
E24	CONVECTION OVEN A 12.0 AMP 120V-1. SERVICE FROM UTILITY RACEWAY, ITEM NO. 81 B 12.0 AMP 120V-1 DUPLEX RECEPTACLE FLUSH MOUNTED IN WALL 48" AF.
E25	FRYER BATTERY A 17.0 KW 480V-3. SERVICE FROM UTILITY RACEWAY, ITEM NO. 81. B 9.0 AMP 120V-1. SERVICE FROM UTILITY RACEWAY, ITEM NO. 81.
E26	TILT SKILLET 5.0 AMP 120V-1. SERVICE FROM UTILITY RACEWAY, ITEM NO. 81.
E29	BOOSTER HEATER 54.0 KW 480V-3, DIVISION 16 WIRE IN "SEAL-TIGHT" CONDUIT FROM ROUGH IN TO THE TERMINAL ON THE EQUIPMENT.
E33	ISLAND WORK TABLE A 2.0 HP 480V-3. DIVISION 16 WIRE IN "SEAL-TIGHT" CONDUIT FROM THE ROUGH-IN TO THE KEC FURNISHED DISCONNECT CONTROL MOUNTED ON TABLE. B 16.0 AMP 120V-1 DIVISION 16 WIRE IN "SEAL-TIGHT" CONDUIT FROM THE ROUGH IN TO A FACTORY MOUNTED JB ON TABLE. RECEPTACLES ON TABLE TO BE INSTALLED AND WIRED TO THE JB BY THE EQUIPMENT MANUFACTURER. PROVIDE A TOTAL OF (4) FOUR RECEPTACLES.
E37	COOK'S TABLE A 2.0 HP 480V-3. DIVISION 16 WIRE IN "SEAL-TIGHT" CONDUIT FROM THE ROUGH-IN TO THE KEC FURNISHED DISCONNECT CONTROL MOUNTED ON TABLE. B FOUR (4) 16.0 AMP 120V-1. DIVISION 16 WIRE IN "SEAL-TIGHT" CONDUIT FROM THE ROUGH IN TO A FACTORY MOUNTED JB ON TABLE. RECEPTACLES ON TABLE TO BE INSTALLED AND WIRED TO THE JB BY THE EQUIPMENT MANUFACTURER. PROVIDE A TOTAL OF FOUR (4) RECEPTACLES.
E37	COOK'S TABLE FOUR (4) 16.0 AMP 120V-1. DIVISION 16 WIRE IN "SEAL-TIGHT" CONDUIT FROM THE ROUGH IN TO A FACTORY MOUNTED JB ON TABLE. RECEPTACLES ON TABLE TO BE INSTALLED AND WIRED TO THE JB BY THE EQUIPMENT MANUFACTURER. PROVIDE A TOTAL OF FOUR (4) RECEPTACLES.
E46	HOT / COLD PASS THRU A 14.2 AMP 120/208V-1. DIVISION 16 WIRE IN "SEAL-TIGHT" CONDUIT FROM THE ROUGH IN TO THE TERMINAL ON THE EQUIPMENT. B 7.3 AMP 120V-1. DIVISION 16 WIRE IN "SEAL-TIGHT" CONDUIT FROM THE ROUGH IN TO THE TERMINAL ON THE EQUIPMENT.
E47	REACH-IN REFRIGERATOR 12.1 AMP 120V-1 DIVISION 16 WIRE IN "SEAL-TIGHT" CONDUIT FROM ROUGH IN TO THE TERMINAL ON THE EQUIPMENT.
E48	REACH-IN FREEZER 19.1 AMP 120V-1. DIVISION 16 WIRE IN "SEAL-TIGHT" CONDUIT FROM ROUGH IN TO THE TERMINAL ON THE EQUIPMENT.
E49	MILK COOLER 8.9 AMP 120V-1. DUPLEX RECEPTACLE FLUSH MOUNTED IN WALL 16" AF.
E50	MILK COOLER 4.6 AMP 120V-1 PEDESTAL TYPE FLOOR RECEPTACLE 4 1/2" MAXIMUM HEIGHT.
E53	HOT FOOD MODULE 46.0 AMP 120/208V-1 SPECIAL PURPOSE RECEPTACLE FLUSH MOUNTED IN WALL 16" AF.

ELECTRICAL SCHEDULE

MARK (X)	EQUIPMENT IS ROUGHED IN FOR MANUFACTURER AND MODEL NUMBER SPECIFIED.
E73	NACHO CHIP DISPENSER 9.4 AMP 120V-1 DUPLEX RECEPTACLE FLUSH MOUNTED IN WALL 48" AF.
E74	WARM CHEESE DISPENSER 4.5 AMP 120V-1 DUPLEX RECEPTACLE FLUSH MOUNTED IN WALL 48" AF.
E78	BEVERAGE DISPLAY 9.0 AMP 120V-1 DUPLEX RECEPTACLE FLUSH MOUNTED IN WALL 16" AF.
E81	UTILITY RACEWAY A 50.0 AMP 208V-3 FOUR WIRE DROP FROM ABOVE AND CONNECT TO TERMINALS ON THE UTILITY RACEWAY. WHERE FIELD JOINTS OCCUR, ALL WIRING SHALL BE RECONNECTED BY DIVISION 16. DIVISION 16 TO PROVIDE THE FOLLOWING: B 50.0 AMP 480V-3 DROP FROM ABOVE AND CONNECT TO TERMINALS ON THE UTILITY RACEWAY. WHERE FIELD JOINTS OCCUR, ALL WIRING SHALL BE RECONNECTED BY DIVISION 16. DIVISION 16 TO PROVIDE THE FOLLOWING: 120 VOLT CIRCUIT FROM FIRE EXTINGUISHING SYSTEM MICRO SWITCH OR RELAY TO THE RED TERMINAL BLOCK IN THE RACEWAY. INTERCONNECT ELECTRICAL FIELD JOINTS BY BOLTING BUSBAR AND/OR WIRING TOGETHER. ALL FITTINGS, BOLTS, ETC. PRE FITTED AND SUPPLIED BY MANUFACTURER. CONTROL WIRING FIELD JOINTS PROVIDED WITH QUICK DISCONNECT DEVICE. INSTALL ELECTRICAL SERVICE, K.O., CONDUIT AND WIRING FROM STUB IN LOCATION TO TERMINALS THRU THE VERTICAL RISER. INSTALL MAIN SERVICE FEEDERS AND OVERCORRECT PROTECTION DEVICES, GRIPS TO APPROPRIATE EQUIPMENT. CONNECT PRE WIRED FLEXIBLE CONDUIT FROM SYSTEM TO APPROPRIATE EQUIPMENT.
E82	DISHTABLE WITH CONVEYOR 1.0 HP 120V-1 DIVISION 16 WIRE IN "SEAL-TIGHT" CONDUIT FROM ROUGH IN TO THE TERMINAL ON THE EQUIPMENT. DIVISION 16 WIRE IN "SEAL-TIGHT" CONDUIT FROM ROUGH IN TO THE TERMINAL ON THE EQUIPMENT. DIVISION 16 WIRE TO REMOTE SWITCHES.
E83	ICE MAKER 12.9 AMP 120V-1. DIVISION 16 WIRE IN "SEAL-TIGHT" CONDUIT FROM ROUGH IN TO THE TERMINAL ON THE EQUIPMENT.
E84	SINK HEATER 9.0 KW 480V-3. DIVISION 16 WIRE IN "SEAL-TIGHT" CONDUIT FROM ROUGH IN TO THE TERMINAL ON THE EQUIPMENT.
E87	VENTILATION HOOD - VERIFY REQUIREMENTS WITH DIVISION 15.
E88	FIRE CONTROL SYSTEM - VERIFY REQUIREMENTS WITH DIVISION 15.
E93	CASH REGISTER A 16.0 AMP 120V-1, 16" AF DUPLEXE RECEPTACLE WITH ISOLATED GROUND AND A DEDICATED CIRCUIT FOR CASH REGISTER. B 16.0 AMP 120V-1 4 1/2" AF PEDESTAL RECEPTACLE WITH ISOLATED GROUND AND A DEDICATED CIRCUIT FOR CASH REGISTER. DIVISION 16 PROVIDE CONDUIT AND CPU WIRING FROM TERMINALS AT THE CASH HANDLING STATIONS TO THE COMPUTER TERMINALS LOCATED IN THE OFFICE.
E94	CLOTHES WASHER 16.0 AMP 120V-1 DUPLEX RECEPTACLE FLUSH MOUNTED IN WALL 16" AF.

ELECTRICAL SCHEDULE

MARK (X)	EQUIPMENT IS ROUGHED IN FOR MANUFACTURER AND MODEL NUMBER SPECIFIED.
E54	COLD FOOD MODULE 16.0 AMP 120V-1 DUPLEX RECEPTACLE FLUSH MOUNTED IN WALL 16" AF.
E57	HOT FOOD MODULE 40.0 AMP 120/208V-1 PEDESTAL TYPE FLOOR RECEPTACLE 4 1/2" MAXIMUM HEIGHT.
E58	COLD FOOD MODULE 16.0 AMP 120V-1 PEDESTAL TYPE FLOOR RECEPTACLE 4 1/2" MAXIMUM HEIGHT.
E61	UNDERCOUNTER REFRIGERATOR 9.0 AMP 120V-1 DUPLEX RECEPTACLE FLUSH MOUNTED IN WALL 16" AF.
E62	FAST FOOD BACK COUNTER A 150.0 KW 480V-3. DIVISION 16 CONNECT TO THE KEC FURNISHED POWER PANEL IN BASE OF COUNTER. ALL COUNTER COMPONENTS FACTORY WIRED TO POWER PANEL. WHERE FIELD JOINTS OCCUR, ALL WIRING SHALL BE RECONNECTED BY DIVISION 16. B 30.0 KW 208V-3. DIVISION 16 CONNECT TO THE KEC FURNISHED POWER PANEL IN BASE OF COUNTER. ALL COUNTER COMPONENTS FACTORY WIRED TO POWER PANEL. WHERE FIELD JOINTS OCCUR, ALL WIRING SHALL BE RECONNECTED BY DIVISION 16.
E63	PIZZA PREP COUNTER 12.0 AMP 120V-1 DUPLEX RECEPTACLE FLUSH MOUNTED IN WALL 16" AF.
E64	PIZZA CUTTING TABLE 3.2 AMP 120V-1 DUPLEX RECEPTACLE FLUSH MOUNTED IN WALL 16" AF.
E65A	PIZZA OVEN 27.0 KW 208V-3 DIVISION 16 WIRE IN "SEAL-TIGHT" CONDUIT FROM ROUGH IN TO THE TERMINAL ON THE EQUIPMENT.
E65B	PIZZA OVEN VENT HOOD 9.0 AMP 208V-1. DIVISION 16 WIRE IN "SEAL-TIGHT" CONDUIT FROM ROUGH IN TO THE TERMINAL ON THE EQUIPMENT.
E66	COUNTER TOP GRIDDLE A 24.0 KW 480V-3, SERVICE FROM ITEM 62, FAST FOOD BACK COUNTER. B 28.9 AMP 208V-1, SERVICE FROM ITEM 62, FAST FOOD BACK COUNTER.
E67	FRYER BATTERY A 17.0 KW 480V-3, SERVICE FROM ITEM 62, FAST FOOD BACK COUNTER. B 9.0 AMP 120V-1, SERVICE FROM ITEM 62, FAST FOOD BACK COUNTER.
E68	FRY & SANDWICH SLIDE 24.3 AMP 120/208V-1, SERVICE FROM ITEM 62, FAST FOOD BACK COUNTER.
E69	WRAPPER / SEALER 6.0 AMP 120V-1 DUPLEX RECEPTACLE FLUSH MOUNTED IN WALL 48" AF.
E70	DISPLAY WARMER 14.0 AMP 120V-1 DUPLEX RECEPTACLE FLUSH MOUNTED IN WALL 16" AF.
E71	MICROWAVE OVEN 24.0 AMP 208V-1, SERVICE FROM ITEM 62, FAST FOOD BACK COUNTER.
E72	ICE CREAM CABINET, MOBILE 2.9 AMP 120V-1 DUPLEX RECEPTACLE FLUSH MOUNTED IN WALL 16" AF.

ELECTRICAL SCHEDULE

MARK (X)	EQUIPMENT IS ROUGHED IN FOR MANUFACTURER AND MODEL NUMBER SPECIFIED.
E99	CLOTHES DRYER 24.0 AMP 208V-1 SPECIAL PURPOSE RECEPTACLE FLUSH MOUNTED IN WALL 16" AF.
E97	DETERGENT INJECTOR SYSTEM 16.0 AMP 120V-1 DUPLEX RECEPTACLE FLUSH MOUNTED IN WALL 60" AF.
E98	MENU BOARDS 16.0 AMP 120V-1 DUPLEX RECEPTACLE MOUNTED 6" ABOVE FINISHED CEILING. DIVISION 16 WIRE FROM RECEPTCLE TO WALL SWITCH.
E99	DISHWASHER VENTILATION SYSTEM - VERIFY REQUIREMENTS WITH DIVISION 15.
E103	HOT FOOD PASS-THRU 14.3 AMP 120/208V-1. DIVISION 16 WIRE IN "SEAL-TIGHT" CONDUIT FROM ROUGH IN TO THE TERMINAL ON THE EQUIPMENT.
E104	COLD FOOD PASS-THRU 12.3 AMP 120V-1. DIVISION 16 WIRE IN "SEAL-TIGHT" CONDUIT FROM ROUGH IN TO THE TERMINAL ON THE EQUIPMENT.
E106	DISPLAY REFRIGERATOR 12.5 AMP 120V-1 DUPLEX RECEPTACLE FLUSH MOUNTED IN WALL 60" AF.
E107	REFRIGERATED GRILL STAND 8.0 AMP 120V-1. SERVICE FROM ITEM 62, FAST FOOD BACK COUNTER.
E109	DROP-IN ICE CREAM FREEZER 3.5 AMP 120V-1 DUPLEX RECEPTACLE FLUSH MOUNTED IN WALL 16" AF.
DR1	WALL RECEPTACLE 16.0 AMP 120V-1 DUPLEX RECEPTACLE FLUSH MOUNTED IN WALL 16" AF.
DR2	WALL RECEPTACLE 16.0 AMP 120V-1 DUPLEX RECEPTACLE FLUSH MOUNTED IN WALL 48" AF.
DR3	DROP CORD 16.0 AMP 120V-1 AT CEILING. DIVISION 16 PROVIDE ELECTRIC DROP CORD TO 78" AF.
DR4	WALL RECEPTACLE 24.0 AMP 208V-1 SPECIAL PURPOSE RECEPTACLE FLUSH MOUNTED IN WALL 16" AF.

COPYRIGHT 1997 BY FANNING/HOWEY ASSOCIATES, INC.

THE NEW
CHESTERTON HIGH SCHOOL
FOR THE
DUNELAND SCHOOL CORPORATION
CHESTERTON, INDIANA

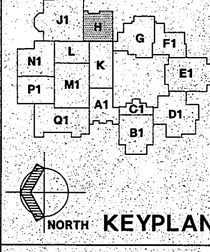

Fanning/Howey Associates, Inc.
Architects Engineers Consultants

ELECTRICAL SCHEDULES

DRAWN BY: D.J.W. COMM. NO.: 95067.00
CHECKED BY: P.T.V. DATE: APRIL 21, 1997
REVISIONS NO. DATE:

FS.6

CHESTERTON HIGH SCHOOL
95067.00

97-FS-06

1/2" = 1'-0"