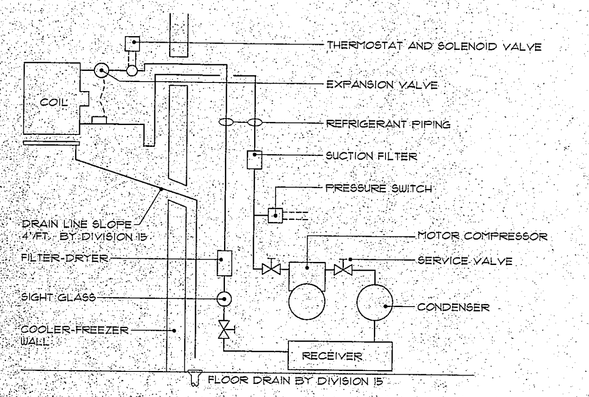

1 COOLER REFRIGERANT PIPING
ITEM NO. 1

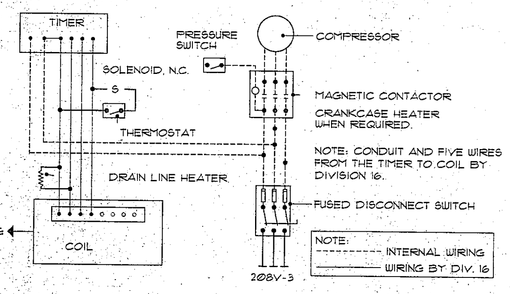

2 FREEZER COIL COMPRESSOR WIRING ITEM NO. 1

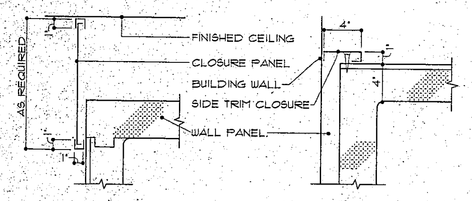

3 COOLER - FREEZER TRIM
ITEM NO. 1

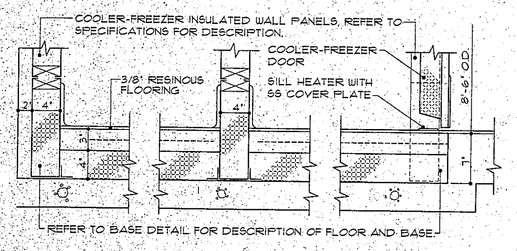

4 COOLER - FREEZER FLOOR RECESS
ITEM NO. 1

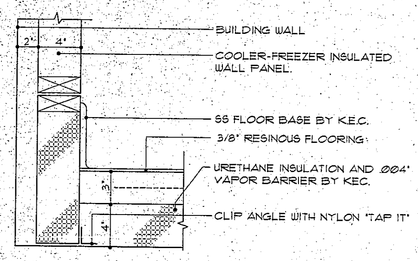

5 COOLER - FREEZER BASE
ITEM NO. 1

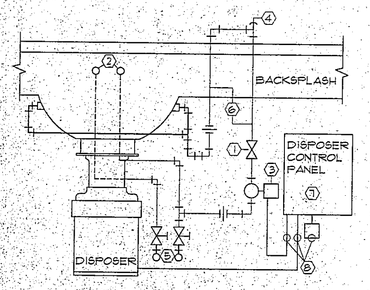

1. FLOW CONTROL VALVE BY KEC
2. FAUCET BY KEC
3. SOLENOID VALVE BY KEC
4. VACUUM BREAKER BY KEC
5. COLD AND HOT WATER SUPPLY WITH SHUT-OFF VALVES BY DIVISION 15
6. INSTALLATION AND PIPING BY DIVISION 15.
7. CONTROL PANEL BY KEC
8. JB AND ELECTRICAL WIRING BY DIVISION 16.

ALL PIPING TO BE 1/2" I.D. COPPER.
ALL WIRING TO BE IN "SEAL-TIGHT" CONDUIT.

6 DISPOSER PIPING
ITEM NO. 19

EQUIPMENT SCHEDULE

MARK	QUAN.	DESCRIPTION	MANUFACTURER & MODEL
1	1	WALK-IN COOLER/FREEZER	MASTER-BILT
1A	2	COOLER COIL	BOHN ADT-650
1B	2	FREEZER COIL	BOHN MPE-260
1C	2	COOLER COMPRESSOR	COPELAND ES3M-0100
1D	2	FREEZER COMPRESSOR	COPELAND CJDL-0400
2	24	SHELF UNIT, MOBILE	METROMAX
3	171	HI-DENSITY SHELVING	METROMAX 'TOP TRACK'
4	41	SHELF UNIT, FIXED	METRO SUPER ERECTA
5	12	DUNNAGE PLATFORM, MOBILE	METRO MHP356 / MHP556
6	12	DUNNAGE PLATFORM, FIXED	METRO HDP556
7	3	SHELF TRUCK, MOBILE	METROMAX X556DGX
8	13	UTILITY CART	METRO BC2030-34
9	3	CAN DISPENSING RACK	ALWAYS CAN 310
10	3	LOCKING SHELF UNIT	METRO SEC55C
11	6	COOLING RACK, MOBILE	FLIE OTR-1860-16
12	1	PROOF CABINET, MOBILE	FLIE PH-1826-18U
13	4	SNACK RACK, MOBILE	RUBBERMAID 3415
14	1	FOOD CUTTER	HOBART 84145
15	2	SLICER	HOBART 1712E
16	2	MIXER, 60 QT.	HOBART H600
17	1	MIXER W/ STAND	HOBART A200/14070
18	1	DISHWASHER	HOBART CRS-86A
19	2	DISPOSER	RED GOAT 4112P-R1
20	1	DISPOSER	RED GOAT B3P-0
21	1	CONVECTION STEAMER	GROEN HY-6SG

EQUIPMENT SCHEDULE

MARK	QUAN.	DESCRIPTION	MANUFACTURER & MODEL
22	2	KETTLE W/ 3" DRAWOFF	GROEN HH4-40
23	1	COMBI OVEN	BLODGETT COMBI.CO6-8G
24	6	CONVECTION OVEN, MOBILE	BLODGETT DPG-100 DBL
25	1	FRYER BATTERY	FRYMASTER 2H17BL8C-IRM
26	1	TILT SKILLET	GROEN NHFP-4
27	1	SIX BURNER RANGE	MONTAGUE 136-5
28	1	TWO BURNER RANGE	MARKET FORGE 2HPG
29	1	BOOSTER HEATER	HATCO C-54
30	1	LAUNDRY TABLE	SOL-O-MATIC TF-325
31	1	UTENSIL WASHING SINK	NORTHERN STAINLESS
32	1	VEGETABLE PREP SINK	NORTHERN STAINLESS
33	1	ISLAND WORK TABLE	NORTHERN STAINLESS
34	4	WORK TABLE, MOBILE	NORTHERN STAINLESS
35	1	CLEAN DISHTABLE	NORTHERN STAINLESS
36	2	DRAIN TROUGH	NORTHERN STAINLESS
37	1	COOK'S TABLE	NORTHERN STAINLESS
38	1	BAKERS TABLE	NORTHERN STAINLESS
39	1	ISLAND WORK TABLE	NORTHERN STAINLESS
40	1	STORAGE CABINET	NORTHERN STAINLESS
41	8	TRAFFIC RAIL	NORTHERN STAINLESS
42	2	TRAY SLIDE	NORTHERN STAINLESS
43	2	SS SOAK SINK, MOBILE	NORTHERN STAINLESS
44	1	FAST FOOD SERVING COUNTER	NORTHERN STAINLESS
45	1	WORK TABLE	NORTHERN STAINLESS
46	2	HOT/COLD FOOD PASS-THRU	TRAULSEN AHF-2-32-WP TRAULSEN AHT-1-32-WPUT

EQUIPMENT SCHEDULE

MARK	QUAN.	DESCRIPTION	MANUFACTURER & MODEL
47	2	REACH-IN REFRIGERATOR	TRAULSEN AHT-2-32-WUT
48	1	REACH-IN FREEZER	TRAULSEN ALT-2-32-WUT
49	2	MILK COOLER	BEVERAGE AIR SMF-49-SS
50	2	MILK COOLER	BEVERAGE AIR ST-49-SS
51	6	TRAY & SILVER DISPENSER	DELFIELD T2-1418-85B
52	6	TRAY & SILVER DISPENSER	DELFIELD T2-1014-86B
53	2	HOT FOOD MODULE, MOBILE	DELFIELD 5H-5
54	2	COLD FOOD MODULE, MOBILE	DELFIELD 5CSC-60
55	2	UTILITY MODULE, MOBILE	DELFIELD 5C-60
56	2	CASHIER MODULE, MOBILE	DELFIELD 5CS-30
57	2	HOT FOOD MODULE, MOBILE	DELFIELD DELFIELD 5H-4
58	2	COLD FOOD MODULE, MOBILE	DELFIELD 5CSC-60
59	2	UTILITY MODULE, MOBILE	DELFIELD 5C-60
60	2	CASHIER MODULE, MOBILE	DELFIELD 5CS-30
61	4	UNDERCOUNTER REFRIGERATOR	DELFIELD 406-CA
62	1	FAST FOOD BACK COUNTER	DELFIELD 1700 SERIES
63	1	PIZZA PREP COUNTER	DELFIELD 18666-PT
64	1	PIZZA CUTTING TABLE	DELFIELD 18666-BMT
65	1	PIZZA OVEN W/ VENTILATOR	MIDDLEBY MARSHALL PS520FS GILES PO-VH
66	2	CLAMSHELL GRIDDLE	LANG 5XL36B
67	1	FRYER BATTERY	FRYMASTER 5-H17BL5C
68	1	FRY & SANDWICH SLIDE	MERCO 2TSW-6224
69	1	WRAPPER / SEALER	HEAT SEAL 625
70	2	DISPLAY WARMER	HATCO FST-2
71	1	MICROWAVE OVEN	PANASONIC NE-2680

EQUIPMENT SCHEDULE

MARK	QUAN.	DESCRIPTION	MANUFACTURER & MODEL
72	2	ICE CREAM CABINET, MOBILE	KELVINATOR 26F
73	2	NACHO CHIP DISPENSER	HATCO FDU-17N
74	2	WARM CHEESE DISPENSER	SERVER 9116D
75	LOT	CONDIMENT DISPENSER	BY OWNER
76	3	INGREDIENT BIN, MOBILE	RUBBERMAID 3607
77		SPARE NUMBER	
78	1	BEVERAGE DISPLAY	DELFIELD 5248-P-24
79	3	WALL CABINET	JAMESTOWN P2203-36
80		SPARE NUMBER	
81	1	UTILITY DISTRIBUTION SYSTEM	AVTEC EIDE
82	1	DISHTABLE CONVEYOR	AVTEC C16W
83	1	ICE MAKER W/ BIN	MANITOWOC BD0452A / C-B10
84	1	SINK HEATER	HATCO 3CS-9 BALANCED
85	4	WALL CABINET	JAMESTOWN
86	1	HOSE REEL	T & S BRASS B-1400
87	5	VENTILATION HOOD	BY DIVISION 15
88	4	FIRE CONTROL SYSTEM	BY DIVISION 15
89	4	HAND SINK	BY DIVISION 15
90	1	MOP SINK	BY DIVISION 15
91	LOT	LOCKERS	BY OWNER
92	LOT	TABLE AND CHAIRS	BY OWNER
93	10	CASH HANDLING SYSTEM	BY OWNER
94	1	CLOTHES WASHER	BY OWNER
95	1	CLOTHES DRYER	BY OWNER
96		SPARE NUMBER	

EQUIPMENT SCHEDULE

MARK	QUAN.	DESCRIPTION	MANUFACTURER & MODEL
97	1	DETERGENT INJECTOR SYSTEM	BY DETERGENT VENDOR
98	4	MENU BOARD	MAINSTREET
99	1	DW VENTILATION SYSTEM	BY DIVISION 15
100		SPARE NUMBER	
101	2	CONDIMENT COUNTER	NORTHERN STAINLESS
102	1	CONDIMENT MODULE	DELFIELD 6C14
103	1	HOT FOOD PASS THRU	TRAULSEN AHF-2-32-WP
104	1	COLD FOOD PASS THRU	TRAULSEN AHT-2-32-WPUT
105	3	SECURITY GATE	NOT IN K.E. CONTRACT
106	1	DISPLAY REFRIGERATOR	TRAULSEN AHT-2-32-NUT-SL
107	1	GRILL STAND, MOBILE	DELFIELD 2916
108	LOT	BREAD RACK, MOBILE	BY BAKERY
109	2	DROP-IN ICE CREAM FREEZER	DELFIELD 225
110		SPARE NUMBER	

EQUIPMENT SCHEDULE

MARK	QUAN.	DESCRIPTION	MANUFACTURER & MODEL
97	1	DETERGENT INJECTOR SYSTEM	BY DETERGENT VENDOR
98	4	MENU BOARD	MAINSTREET
99	1	DW VENTILATION SYSTEM	BY DIVISION 15
100		SPARE NUMBER	
101	2	CONDIMENT COUNTER	NORTHERN STAINLESS
102	1	CONDIMENT MODULE	DELFIELD 6C14
103	1	HOT FOOD PASS THRU	TRAULSEN AHF-2-32-WP
104	1	COLD FOOD PASS THRU	TRAULSEN AHT-2-32-WPUT
105	3	SECURITY GATE	NOT IN K.E. CONTRACT
106	1	DISPLAY REFRIGERATOR	TRAULSEN AHT-2-32-NUT-SL
107	1	GRILL STAND, MOBILE	DELFIELD 2916
108	LOT	BREAD RACK, MOBILE	BY BAKERY
109	2	DROP-IN ICE CREAM FREEZER	DELFIELD 225
110		SPARE NUMBER	

GENERAL NOTES

EQUIPMENT SHALL BE FURNISHED AND INSTALLED IN STRICT CONFORMANCE WITH ALL STATE AND/OR LOCAL CODES.

ASSIST THE VARIOUS TRADES IN THE PROPER INSTALLATION OF COMPONENTS WHICH ARE FURNISHED WITH THE EQUIPMENT. PROVIDE PIPING DIAGRAMS AND INSTALLATION INSTRUCTIONS WHERE APPLICABLE.

DIMENSIONS ARE TO BE FIELD VERIFIED PRIOR TO START OF FABRICATION.

EQUIPMENT WHICH IS NOT MOBILE (ON CASTERS) AND WHERE IT ABUTS OTHER FIXED EQUIPMENT, BUILDING WALLS, FLOOR OR CEILING SHALL BE SEALED AND/OR TRIMMED OUT WITH SILICONE AND/OR SS MATCHING TRIM. GAPS EXCEEDING 3/8" IN WIDTH MUST BE TRIMMED OUT WITH STAINLESS STEEL OR MATCHING TRIM.

SLOPE FINISHED FLOOR ONLY SLIGHTLY TO FLOOR DRAINS UNLESS SPECIFICALLY STATED OTHERWISE ON THE DRAWINGS.

REFER TO THE DRAWINGS, SPECIFICATIONS AND THE ELECTRICAL - MECHANICAL DATA NOTES FOR ADDITIONAL RESPONSIBILITIES.

(34) = ITEM NUMBER

(34) = DETAIL NUMBER

1. FLOW CONTROL VALVE BY KEC
2. TROUGH INLET BY KEC
3. BALL VALVE
4. VACUUM BREAKER BY KEC (3/4")
5. COLD AND HOT WATER SUPPLY WITH SHUT-OFF VALVES BY DIVISION 15
6. INSTALLATION AND PIPING BY DIV 15
7. CONTROL PANEL BY KEC
8. SOLENOID VALVE BY KEC
9. JB AND ALL ELECTRICAL BY DIV. 16
10. 3/8" PIPING CONCEALED IN WALL BY DIVISION 15
11. C.P. EXPOSED PIPING BY DIV. 15
12. STUB OUT
13. PRESSURE TYPE VACUUM BREAKER BY KEC
14. MIXING VALVE

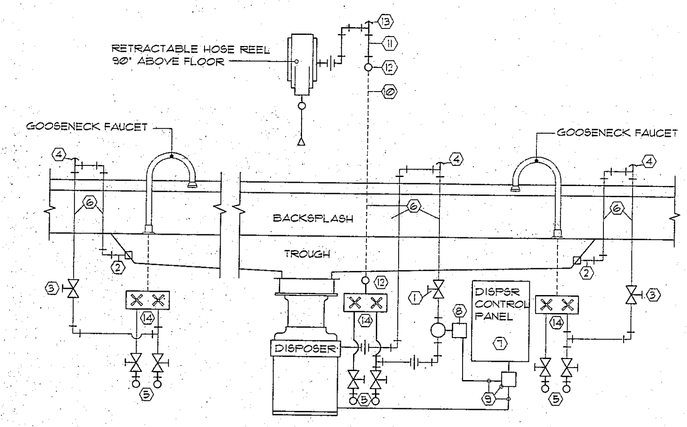

7 DISHTABLE, DISPOSER, HOSE REEL PIPING ITEM NO. 20

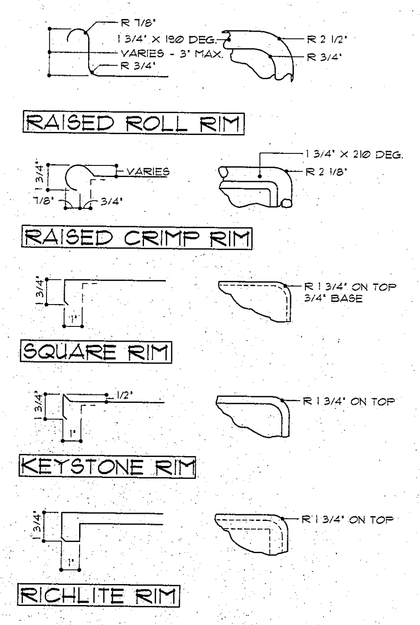

8 TABLE TOP EDGE AND CORNER DETAILS

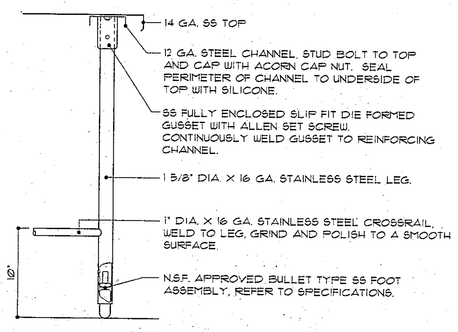

9 TYPICAL LEG ASSEMBLY

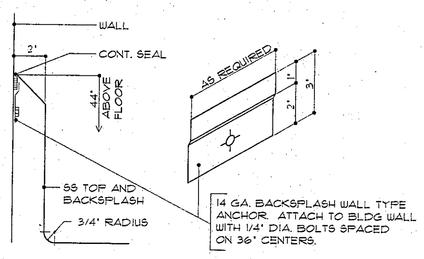

10 TYPICAL TABLE BACKSPLASH

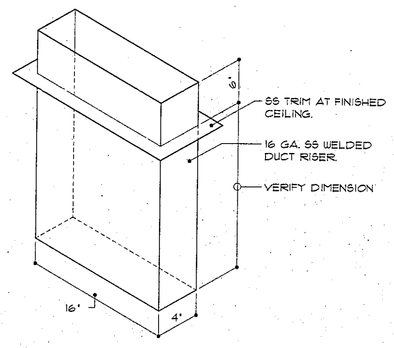

11 DISHWASHER DUCT RISER
ITEM NO. 18

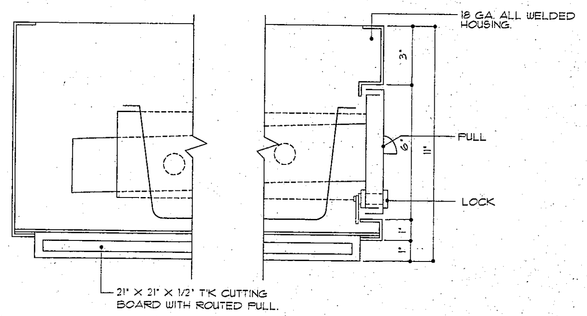

NOTE: NOTCH HOUSING AS REQ'D FOR TOP BRACING. STUD BOLT HOUSING TO UNDERSIDE OF TABLE TOP. CORNERS OF DRAWER PAN FLANGES TO BE ROUNDED. DRAWER TO BE SELF CLOSING.

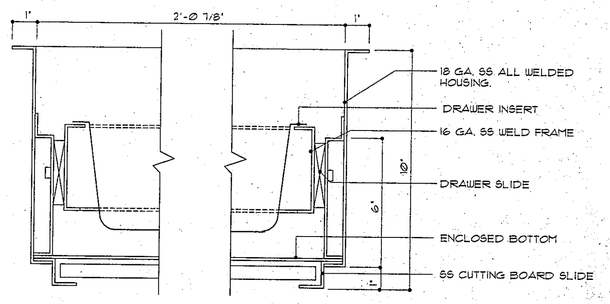

12 TYPICAL DRAWER ASSEMBLY

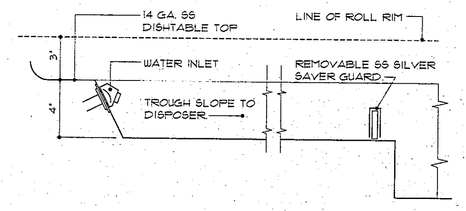

13 SOILED DISHTABLE SCRAP TROUGH
ITEM NO. 82

WARNING

THIS SINK BOWL AND TAP CONTAIN VERY HOT WATER!

USE EXTREME CARE

14 TYPICAL WARNING SIGN

97-FS-02

1/2" = 1'-0"

COPYRIGHT 1997 BY FANNING/HOWEY ASSOCIATES, INC.

DOUGLAS M. WOLF
STATE OF INDIANA
ARCHITECT

LEE BROCKWAY
STATE OF INDIANA
ARCHITECT

THE NEW
CHESTERTON HIGH SCHOOL
FOR THE
DUNELAND SCHOOL CORPORATION
CHESTERTON, INDIANA

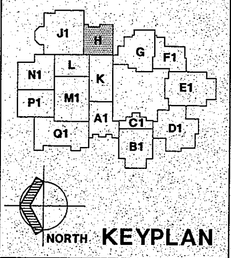

Fanning/Howey Associates, Inc.
Architects Engineers Consultants

EQUIPMENT SCHEDULE

DRAWN BY: D.J.W.
CHECKED BY: P.T.V.
COMM. NO.: 95067.00
DATE: APRIL 21, 1997
REVISIONS NO. DATE

FS.2

CHESTERTON HIGH SCHOOL
95067.00