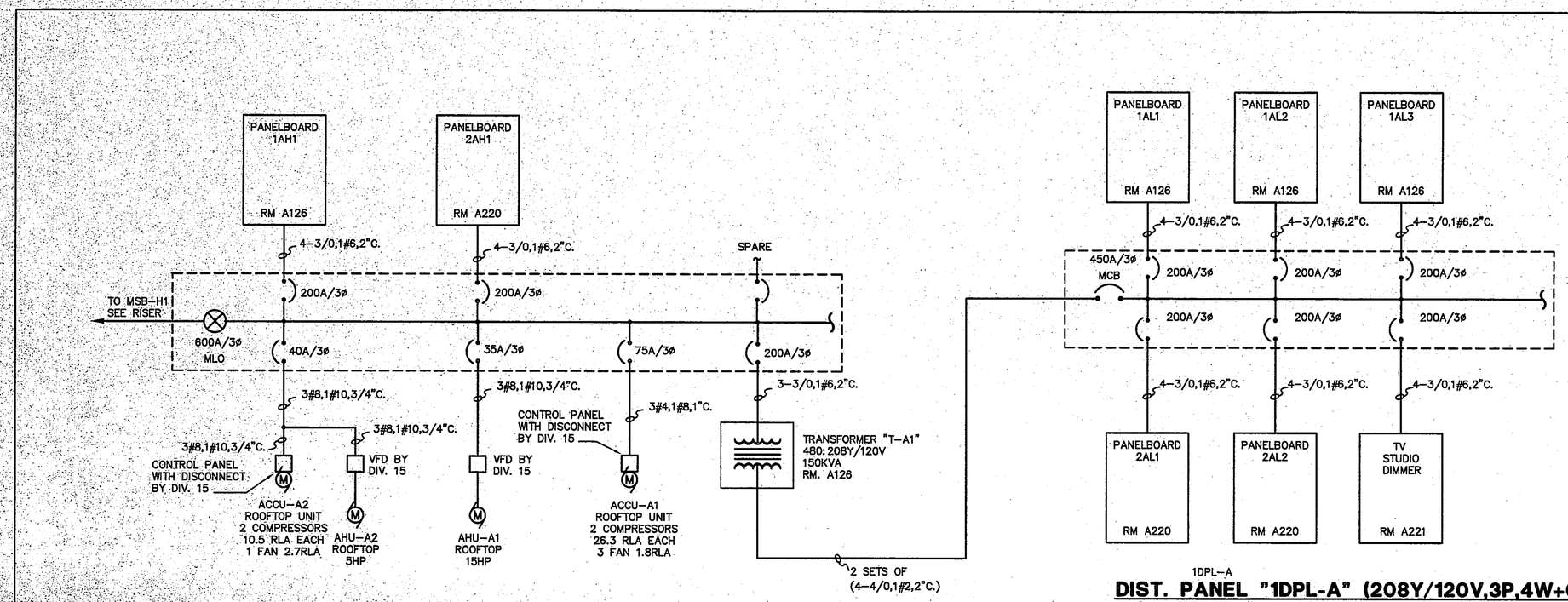

DIST. PANEL "1DPH-A" (480Y/277V,3P,4W+G)
SQ-D I-LINE TYPE (RM. A126) NO SCALE

1DPL-A
DIST. PANEL "1DPL-A" (208Y/120V,3P,4W+G)
SQ-D I-LINE TYPE (RM. A126) NO SCALE

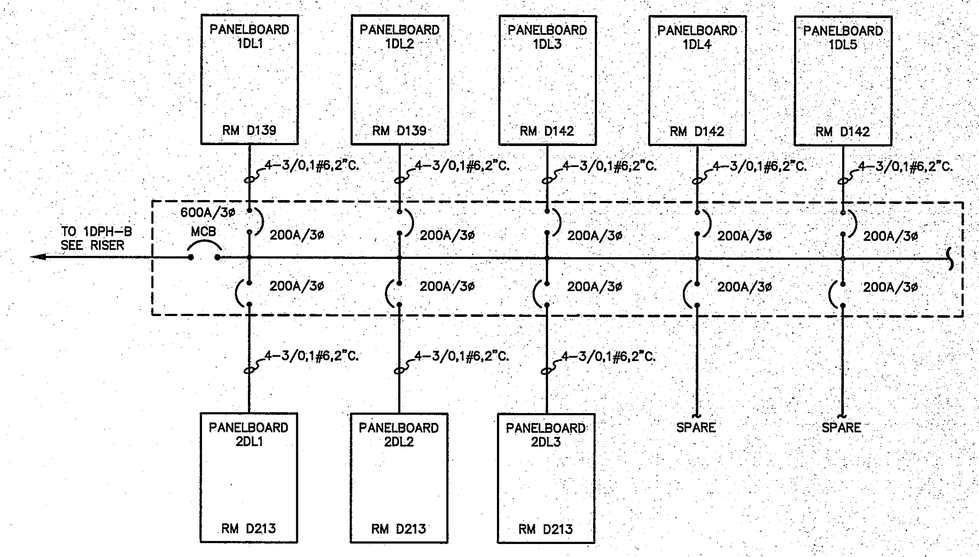

DIST. PANEL "2DPL-D" (208Y/120V,3P,4W+G)
SQ-D I-LINE TYPE (RM. D213) NO SCALE

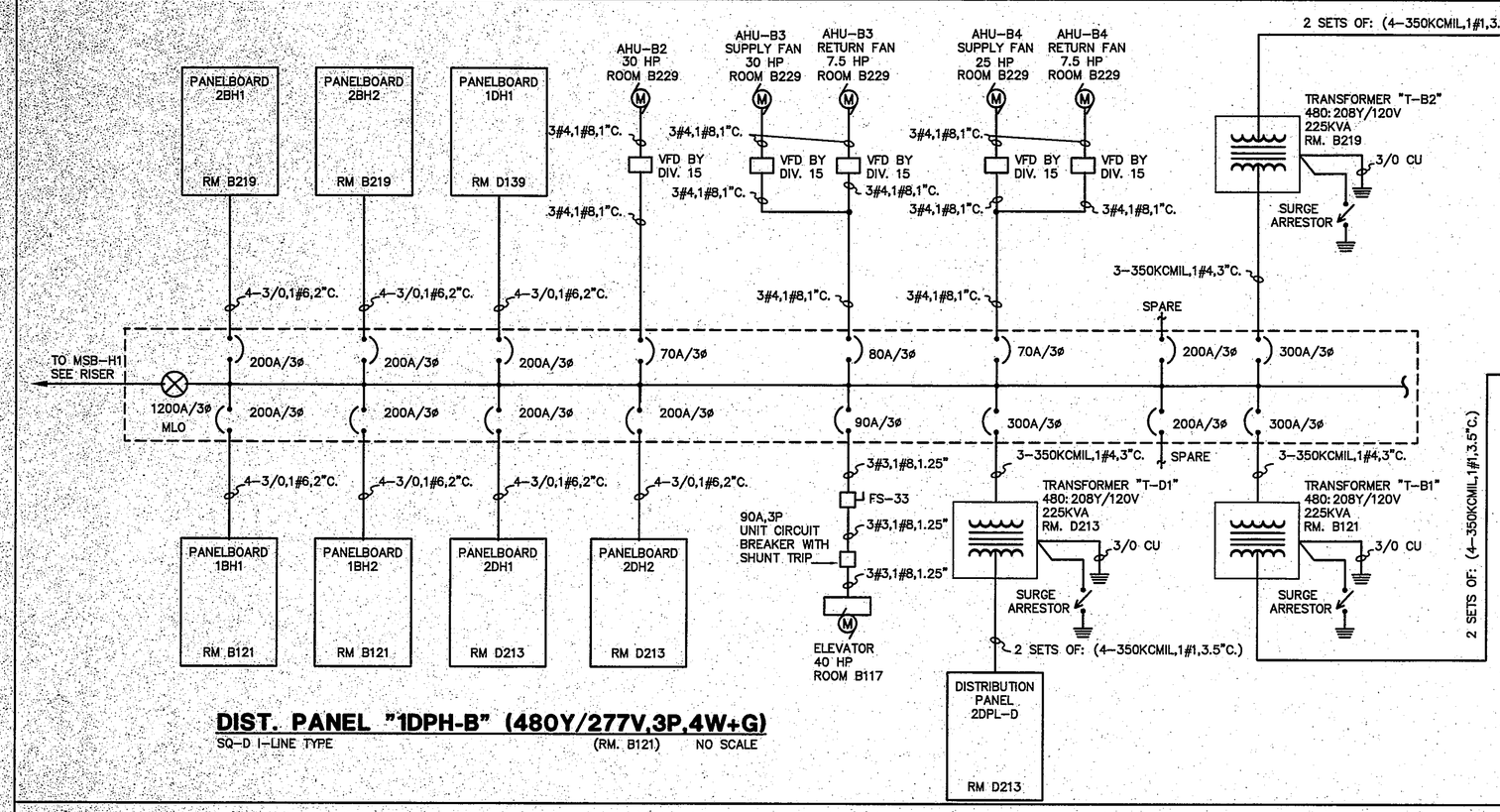

DIST. PANEL "1DPH-B" (480Y/277V,3P,4W+G)
SQ-D I-LINE TYPE (RM. B121) NO SCALE

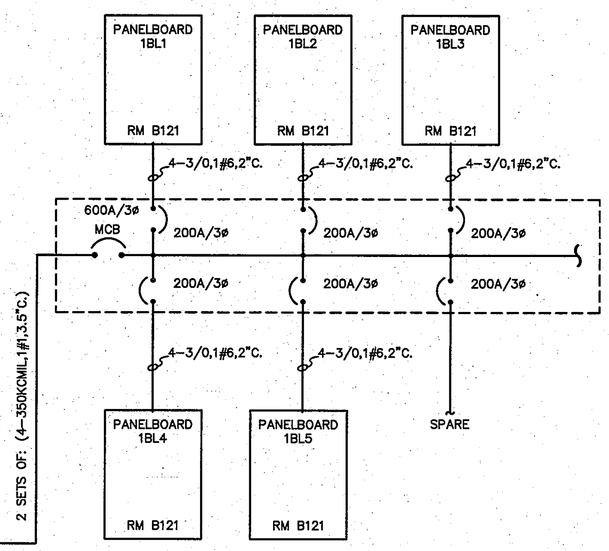

DIST. PANEL "1DPL-B" (208Y/120V,3P,4W+G)
SQ-D I-LINE TYPE (RM. B121) NO SCALE

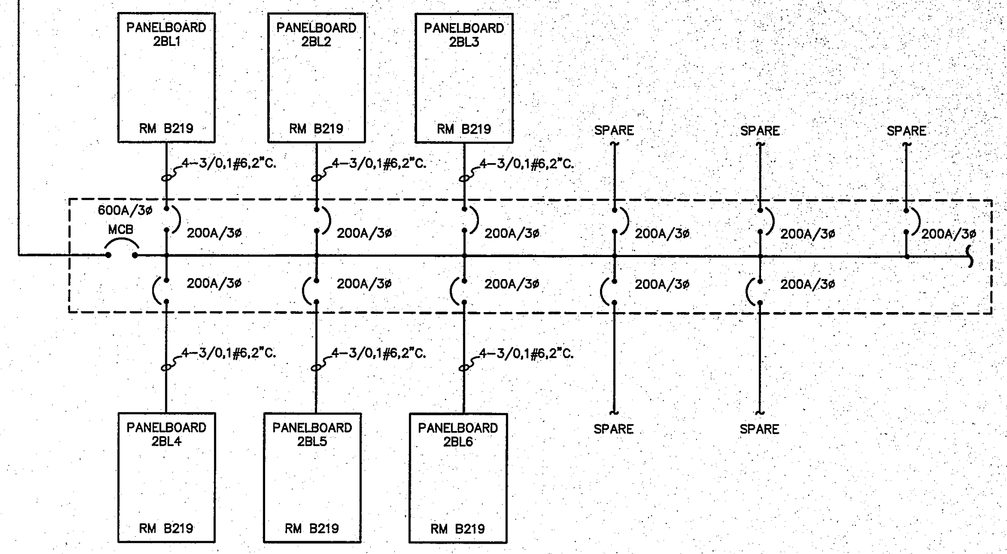

DIST. PANEL "2DPL-B" (208Y/120V,3P,4W+G)
SQ-D I-LINE TYPE (RM. B219) NO SCALE

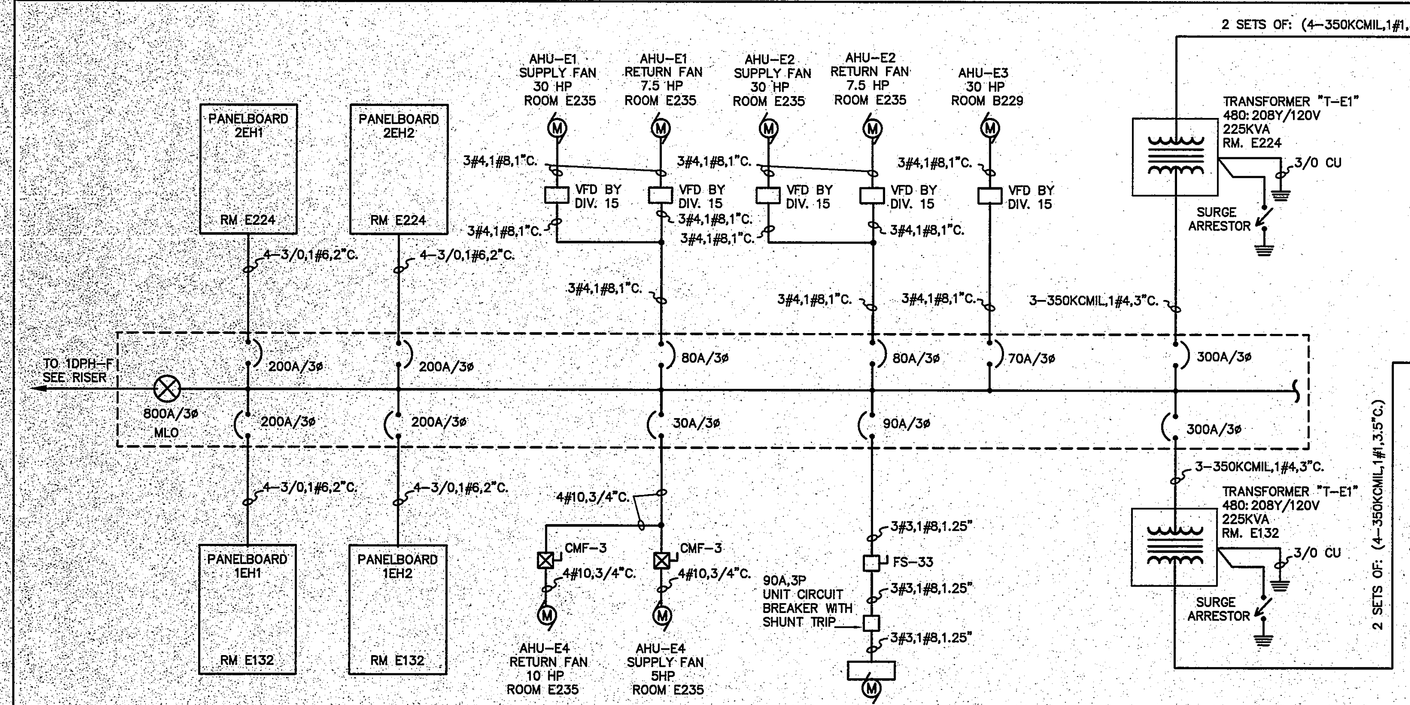

DIST. PANEL "1DPH-E" (480Y/277V,3P,4W+G)
SQ-D I-LINE TYPE (RM. E132) NO SCALE

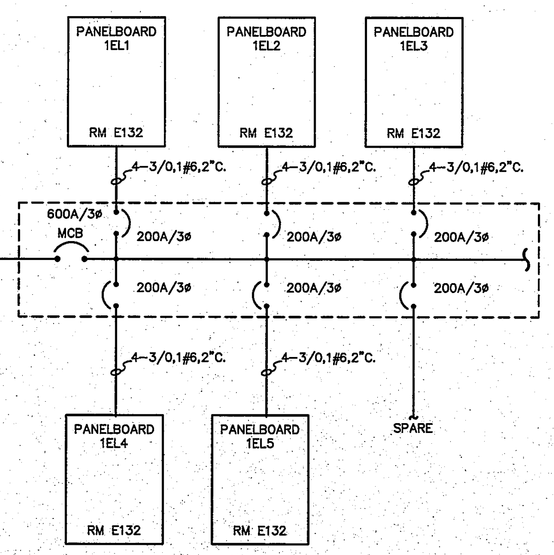

DIST. PANEL "1DPL-E" (208Y/120V,3P,4W+G)
SQ-D I-LINE TYPE (RM. E132) NO SCALE

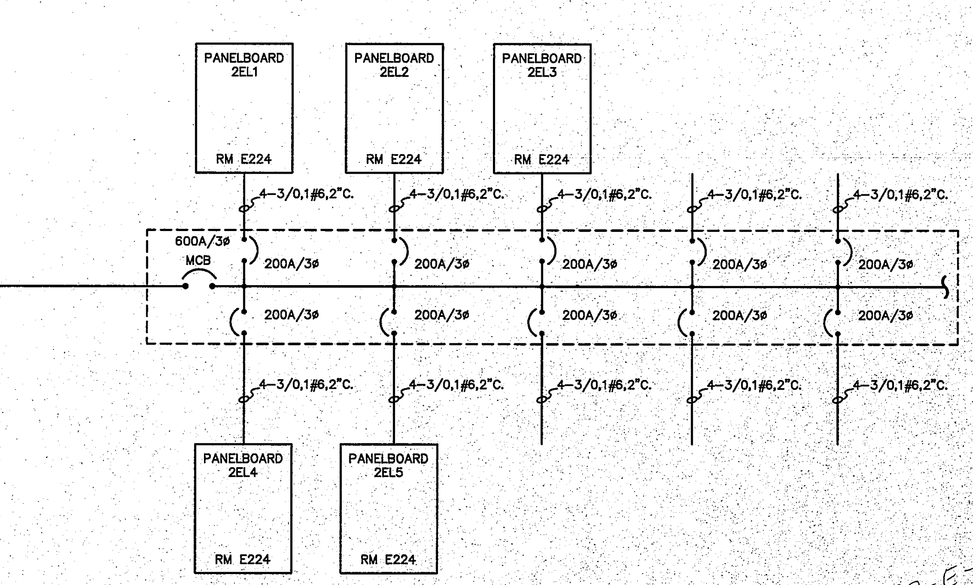

DIST. PANEL "2DPL-E" (208Y/120V,3P,4W+G)
SQ-D I-LINE TYPE (RM. E224) NO SCALE

97-E-99

COPYRIGHT 1997 BY FANNING/HOWEY ASSOCIATES, INC.

DOUGLAS M. WICKSTROM REGISTERED ARCHITECT STATE OF INDIANA

LEE BROCKSMITH REGISTERED ARCHITECT STATE OF INDIANA

THE NEW
CHESTERTON HIGH SCHOOL
FOR THE
DUNELAND SCHOOL CORPORATION
CHESTERTON, INDIANA

Fanning/Howey Associates, Inc.
Architects Engineers Consultants

RISER DIAGRAMS

DRAWN BY: MRS COMBI. NO.: 95067.00
CHECKED BY: WBH DATE: APRIL 21, 1997
REVISIONS NO. DATE

E7.3

CHESTERTON HIGH SCHOOL
95067.00

D:\95067.00\ELEC\E7-03 Mon Apr 21 03:26:21 1997 (1:1) ma=mch

101