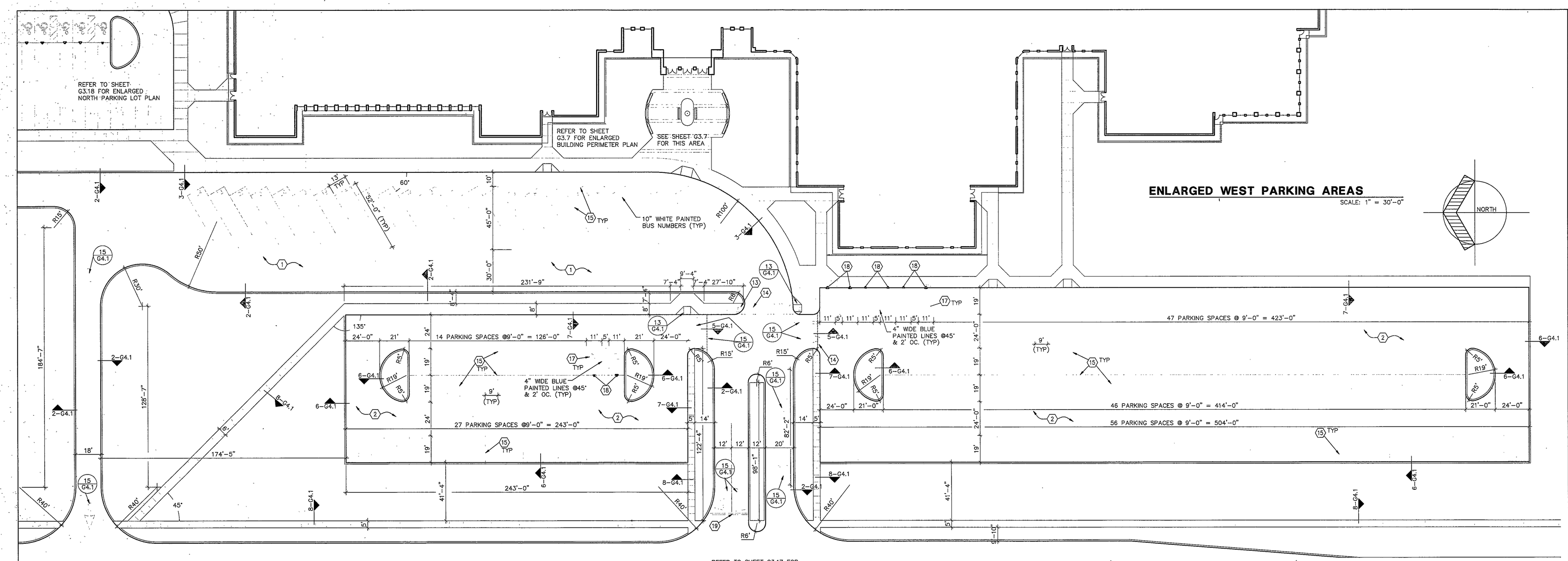

ENLARGED WEST PARKING AREAS

SCALE: 1" = 30'-0"

REFER TO SHEET G3.17 FOR ENLARGED MERIDIAN ROAD PLAN

LEGEND

1. HEAVY DUTY PAVEMENT
2. STANDARD DUTY PAVEMENT
3. ASPHALT PAVEMENT. SEE SECTION NOTE.
4. 6" THICK CONCRETE. SEE DIVISION 3.
5. 4" THICK CONCRETE, SEE DIVISION 3
6. STRUCTURAL STOOP. SEE DETAILS 15 & 16 SHT.S1.16.
7. GRAVEL BED WITH WEED BARRIER
8. GRAVEL BED WITH WEED BARRIER AND DRAINAGE TUBING, SEE SECTION
9. MECHANICAL UNIT CONCRETE PAD, SEE 9–S4.5
10. MASONRY SCREEN WALL, SEE SECTION 11–S1.16
11. PIPE BOLLARD SEE DETAIL 4–G4.2
12. EXPANSION JOINT BETWEEN CONCRETE FLATWORK AND VERTICAL SURFACE
13. CONCRETE TO WARP DOWN TO FLUSH WITH ADJACENT PAVEMENT
14. PAINTED CROSSWALK, SEE DETAIL 16–G4.1
15. 4" WIDE PAINTED LINE (WHITE) SEE SECTION 02511
16. 4" WIDE PAINTED LINE (YELLOW) SEE SECTION 02511
17. HANDICAPPED ACCESSIBLE PAINTED SYMBOL
18. HANDICAPPED ACCESSIBLE SIGN, SEE DETAIL 2–G4.2
19. 12" WIDE PAINTED STOP BAR
20. STOP SIGN, SEE DETAIL 3–G4.2
21. 10' HIGH CHAIN LINK FENCE, SEE SECTION 02830
22. 8' HIGH CHAIN LINK FENCE, SEE SECTION 02830
23. 6' HIGH CHAIN LINK FENCE, SEE SECTION 02830
24. 12' WIDE GATE
25. GATE, NOTE WIDTH ON PLAN
26. FLAGPOLE, SEE DETAIL 10–G4.2
27. 8' BENCH, SEE SECTION 02800, SEE DETAIL 7–G4.2
28. 6' BENCH, SEE SECTION 02800, SEE DETAIL 1–G3.19
29. TABLE, SEE SECTION 02800
30. TRASH RECEPTABLE, SEE SECTION 02800
31. BICYCLE RACK, SINGLE SIDED, SEE SECTION 02800
32. PLAYERS BENCH, SEE SECTION 02800
33. INFIELD MATERIAL, SEE SECTION 02800

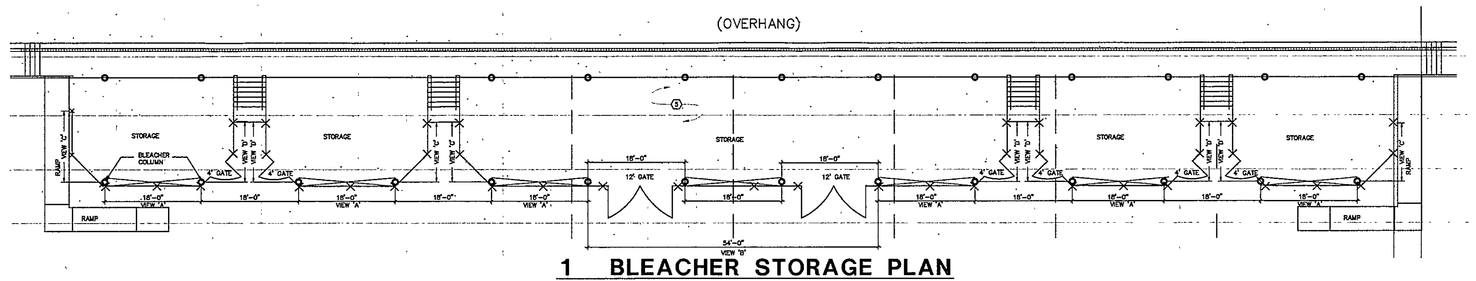

1 BLEACHER STORAGE PLAN

1/16" – 1'-0"

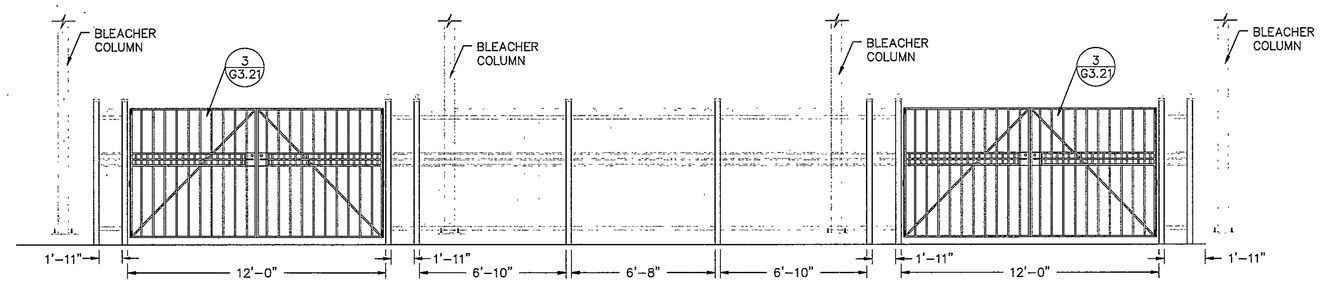

FRONT VIEW 'B'

1/4"=1'-0"

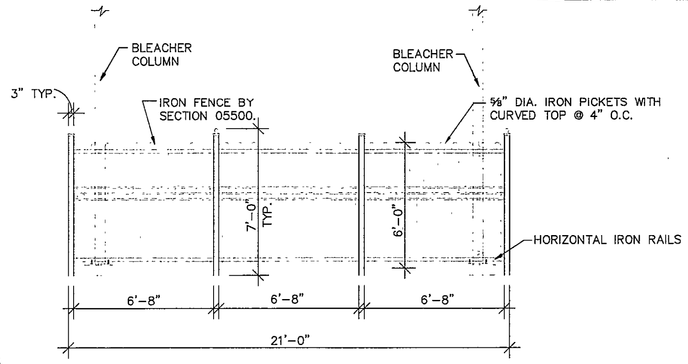

FRONT VIEW 'A'

1/4"=1'-0"

IRON FENCE NOTES (SECTION 05500)

1. PROVIDE 3"x3"x3/16" TERMINAL POSTS WITH BALLTOP WHERE INDICATED ON DRAWINGS.
2. PROVIDE 5/8" DIA. IRON PICKETS WITH CURVED TOP AT 4" O.C.
3. PROVIDE HORIZONTAL IRON RAILS WHERE INDICATED ON DRAWINGS.
4. PAINT ALL COMPONENTS OF IRON FENCE WITH PRATT & LAMBERT #41.1 SYSTEM BY SECTION 09900.
5. PROVIDE HARDWARE FOR GATES AS SPECIFIED IN SECTION 05500.

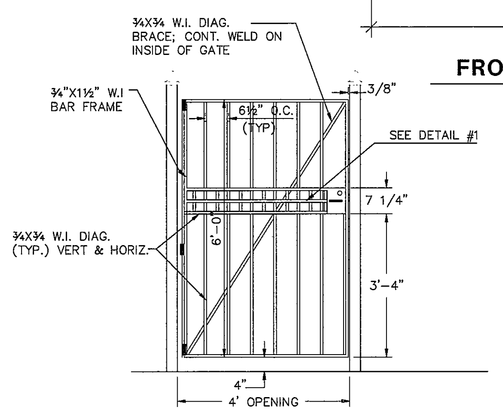

2 4' GATE

1/2"=1'-0"

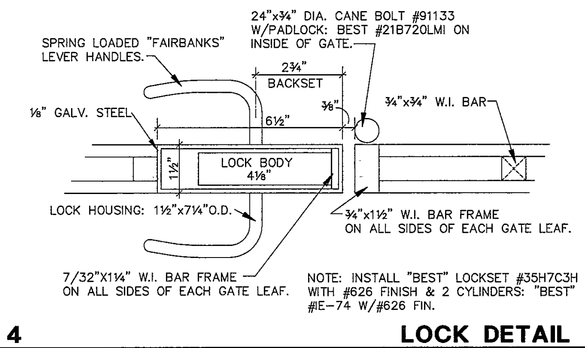

NOTE: INSTALL "BEST" LOCKSET #35H7C3H WITH #626 FINISH & 2 CYLINDERS: "BEST" #E-74 W/#626 FIN.

4 LOCK DETAIL

SCALE: 3/8" = 1"

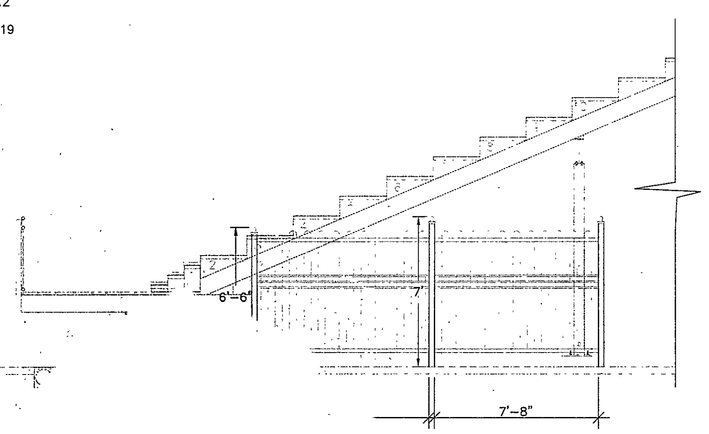

SECTION - VIEW 'C'

1/4"=1'-0"

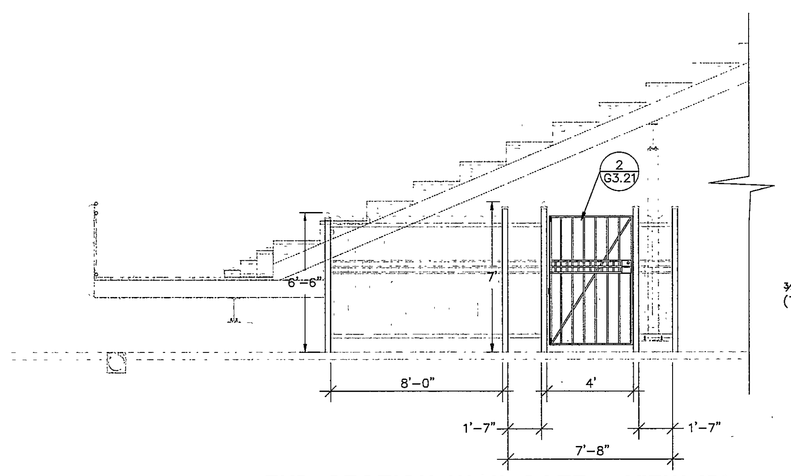

END SECTION W/4' GATE - VIEW 'D'

1/4"=1'-0"

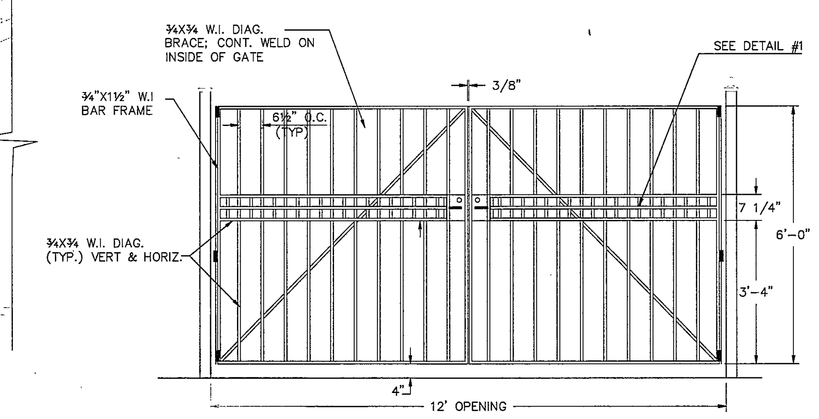

12' GATE

1/2"=1'-0"

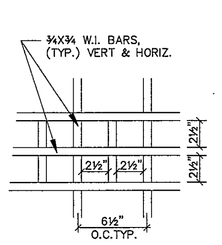

1 WROUGHT IRON DETAIL

1 1/2" – 1'-0"

97-C-26

COPYRIGHT 1997 BY FANNING/HOWEY ASSOCIATES, INC.

STEVEN A. FEDDING No. 11192 STATE OF INDIANA REGISTERED ARCHITECT

No. L0083 STATE OF INDIANA REGISTERED LANDSCAPE ARCHITECT

THE NEW
CHESTERTON HIGH SCHOOL
FOR THE
DUNELAND SCHOOL CORPORATION
CHESTERTON, INDIANA

Fanning/Howey Associates, Inc.
Architects Engineers Consultants

ENLARGED WEST PARKING AREAS	
DRAWN BY: NJK	COMM. NO.: 95067.00
CHECKED BY: STU	DATE: APRIL 21, 1997
G3.21	REVISIONS NO. DATE

CHESTERTON HIGH SCHOOL
95067.00 PHASE 2