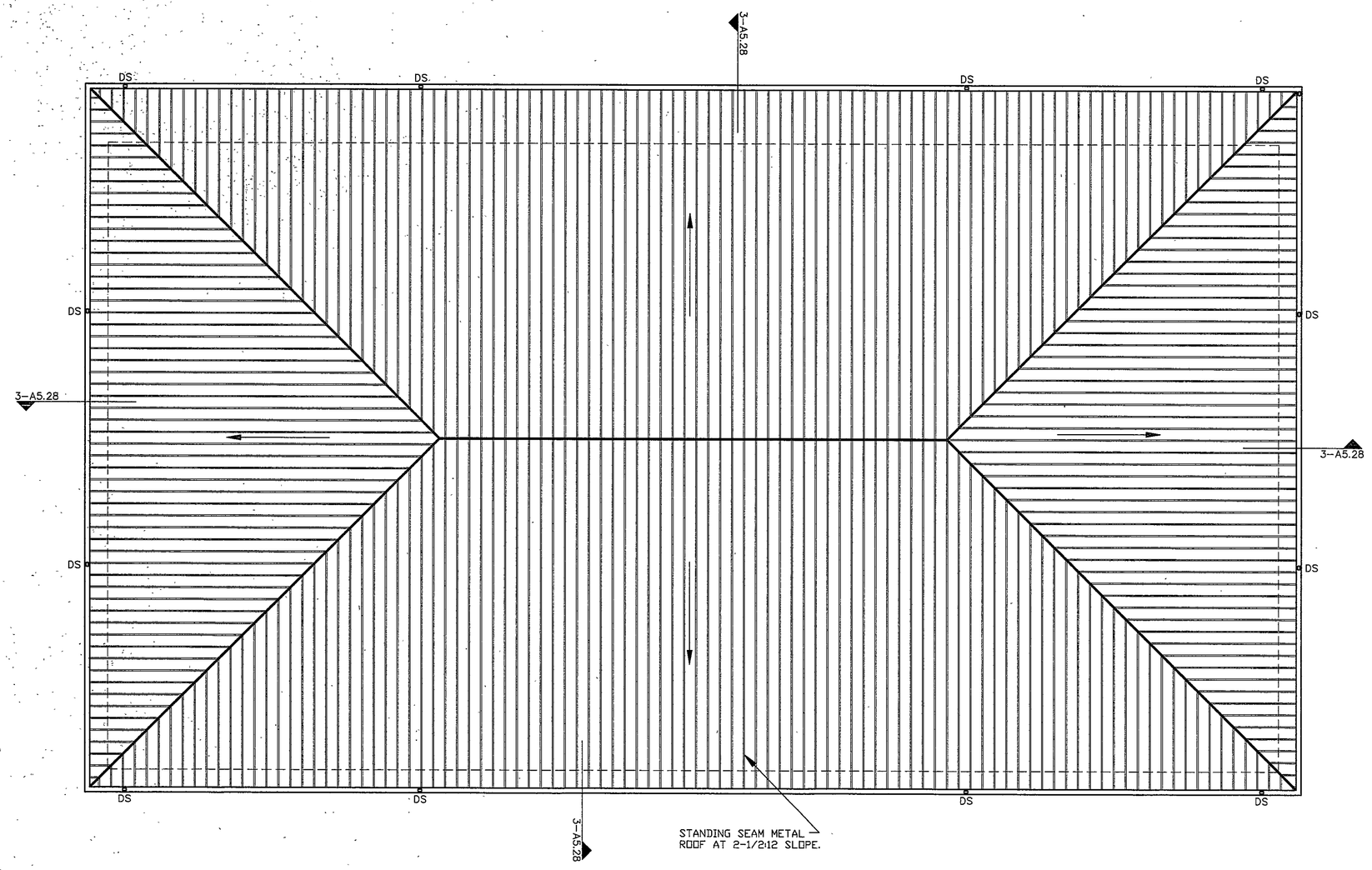


**1 ROOF PLAN - UNIT R**
UNIT "R" SCALE 1/8"=1'-0"

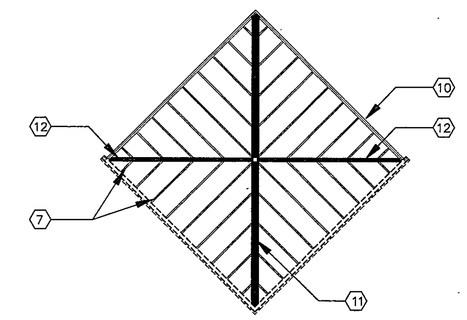


**HIGH ROOF CEILING FRAMING PLAN**
UNIT "T,U,& V" SCALE 1/8"=1'-0"

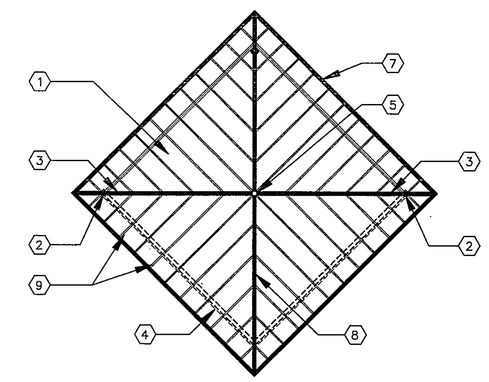


**HIGH ROOF FRAMING PLAN**
UNIT "T,U,& V" SCALE 1/8"=1'-0"

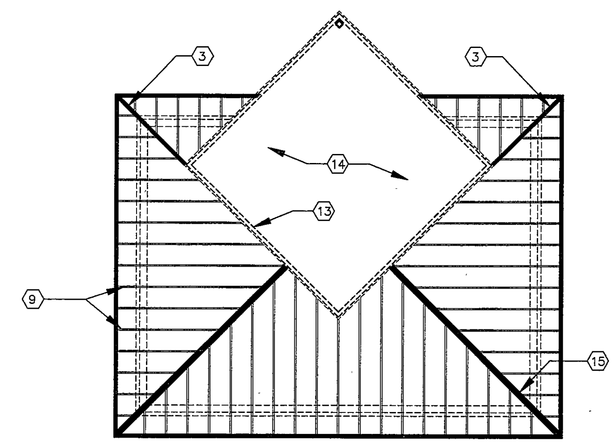


**LOW ROOF FRAMING PLAN**
UNIT "T,U,& V" SCALE 1/8"=1'-0"

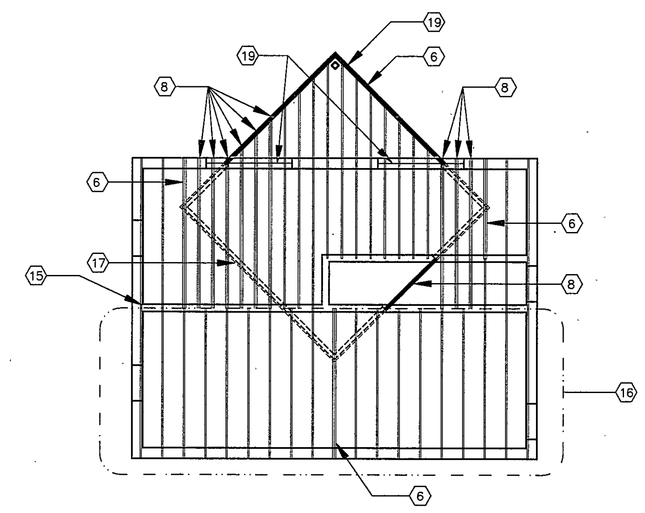


**LOW ROOF CEILING FRAMING PLAN**
UNIT "T,U,& V" SCALE 1/8"=1'-0"

## UNITS T,U,&V FRAMING NOTES:

1. — 5/8" PLYWOOD
2. — 3 STUDS
3. — (2) – 2 X 8
4. — 2 X 4 STUD WALL
5. — 6 X 6 POST TO CEILING BELOW
6. — (2) – 1 3/4 X 11 7/8 M.L.
7. — ALL CLG. JOISTS 2 X 6 @ 24" O.C.
8. — (2) – 2 X 12
9. — ALL RAFTERS 2 X 8 @ 24" O.C.
10. — ROOF BEAM. SEE UPPER PLAN
11. — (4) – 1 3/4 X 14 M.L.
12. — (2) – 2 X 10
13. — STUD WALL
14. — SEE HIGH ROOF CEILING AND FRAMING PLAN
15. — (3) – 1 3/4 X 11 7/8 M.L.
16. — CEILING JOISTS IN THIS AREA 2 X 12 @ 24" O.C.
17. — WALL ABOVE
18. — CEILING JOISTS IN THIS AREA 2 X 12 @ 16" O.C.
19. — WB X 18 W/ 3/8L

## GENERAL NOTES:

1. USE SIMPSON CONNECTORS OR EQUAL @ ALL CO"
2. 2X LUMBER TO BE SOUTHERN PINE #2 OR BE"
3. ALL MICRO LAMS TO HAVE Fb = 2800 P
4. SEE PLANS AND SECTIONS FOR DIM"

97-A-43

COPYRIGHT 1997 BY FANNING/HOWEY ASSOCIATES, INC.

THOMAS M. WICKSTROM REGISTERED NO. 3009 STATE OF INDIANA ARCHITECT

LEE BROCKPEN, JR. REGISTERED NO. 7866 STATE OF INDIANA ARCHITECT

THE NEW
**CHESTERTON HIGH SCHOOL**
FOR THE
DUNELAND SCHOOL CORPORATION
CHESTERTON, INDIANA

Fanning/Howey Associates, Inc.
Architects Engineers Consultants

**ROOF PLANS & DETAILS**

DRAWN BY: SM COMM. NO.: 95067.00
CHECKED BY: LEC DATE: APRIL 21, 1997

REVISIONS NO. DATE

**A2.3**

CHESTERTON HIGH SCHOOL
95067.00