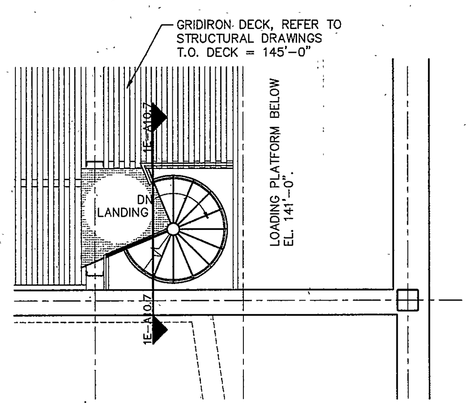

1B GRIDIRON PLATFORM 145'-0"

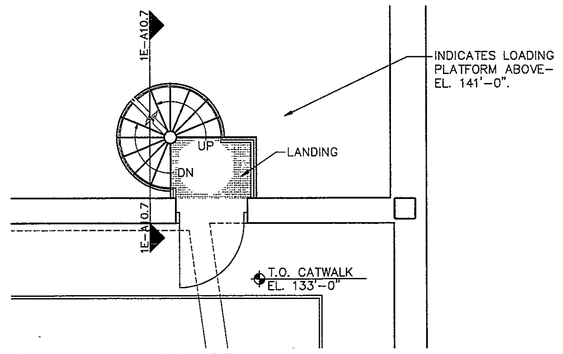

1B CATWALK 133'-0"

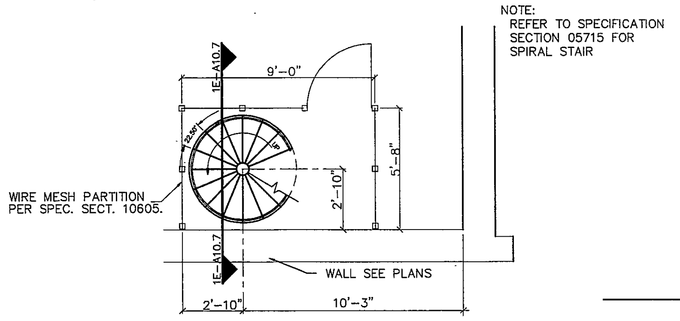

1A FIRST FLOOR 100'-0"

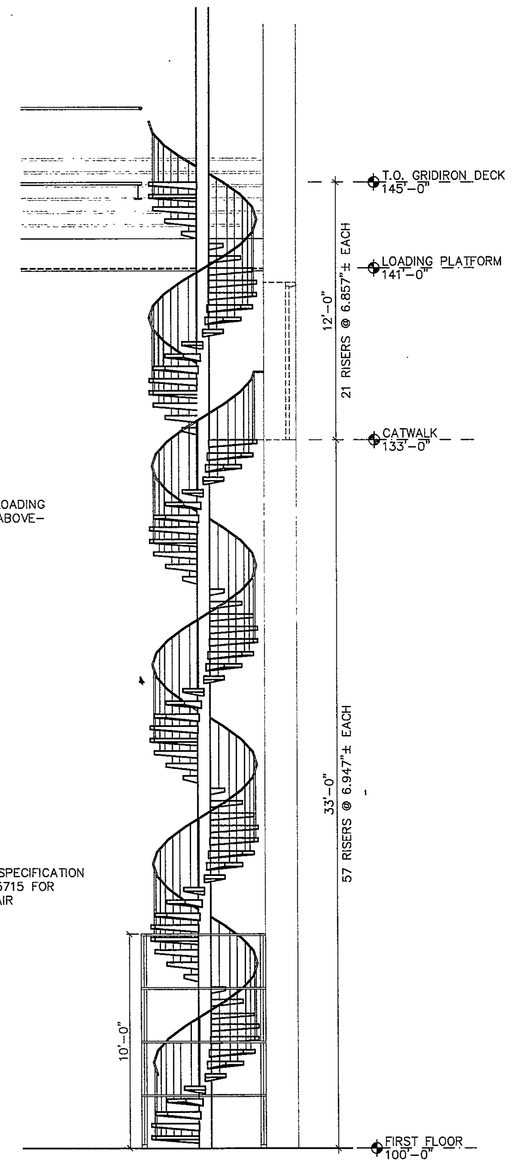

1E SECTION

1 SPIRAL STAIR AT UNIT J

1/4" = 1'-0"

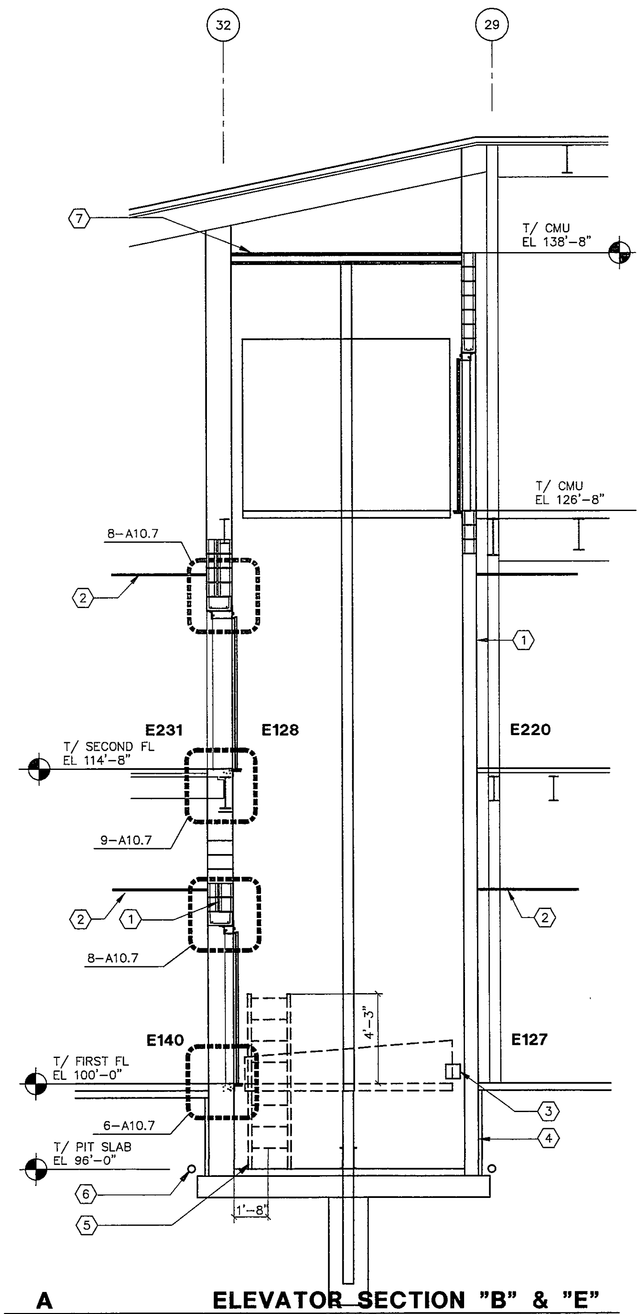

A ELEVATOR SECTION "B" & "E"

1/4"=1'-0"

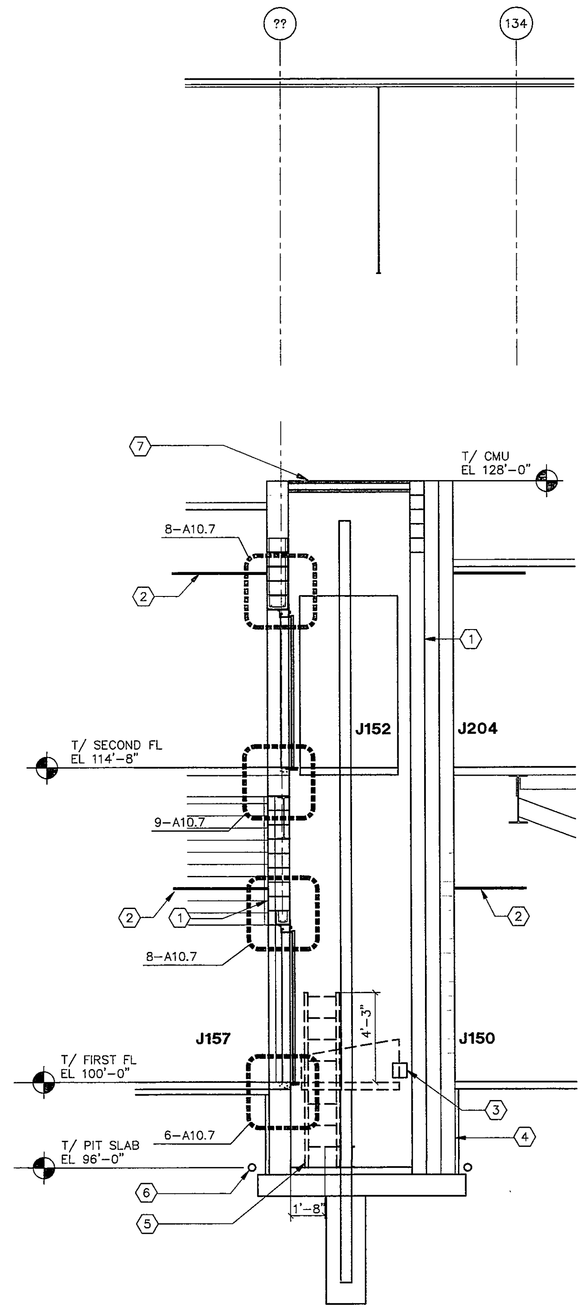

B ELEVATOR SECTION "J"

1/4"=1'-0"

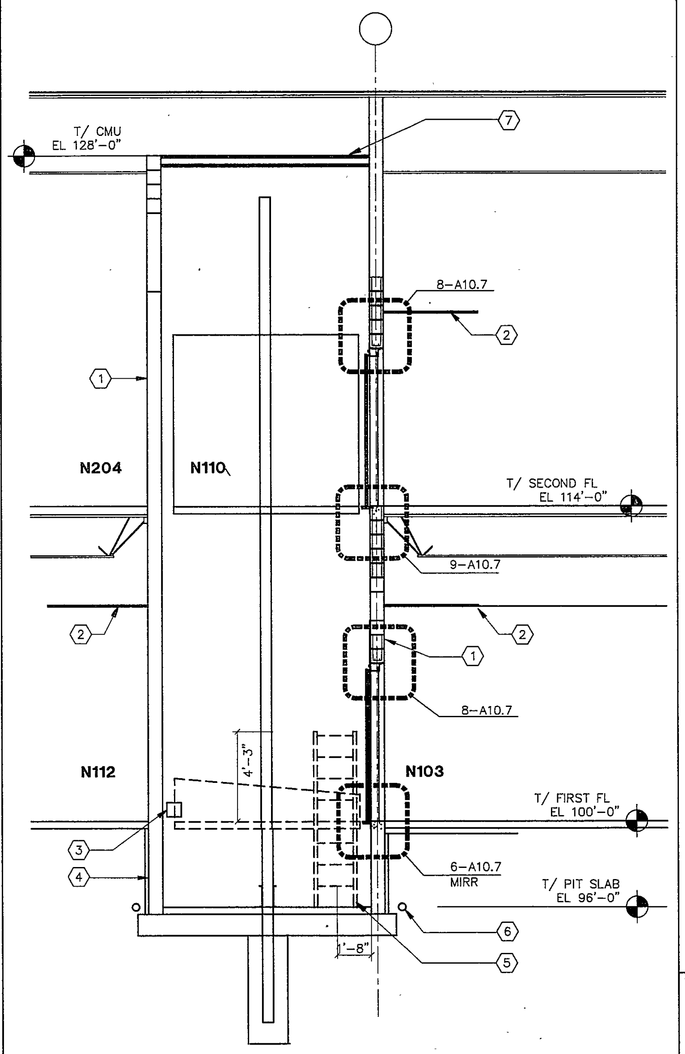

C ELEVATOR SECTION "N"

1/4"=1'-0"

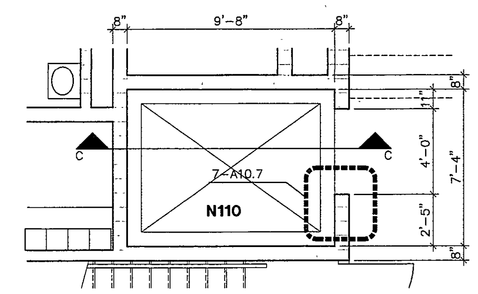

5 ELEVATOR - UNIT "N"

1/4" = 1'-0"

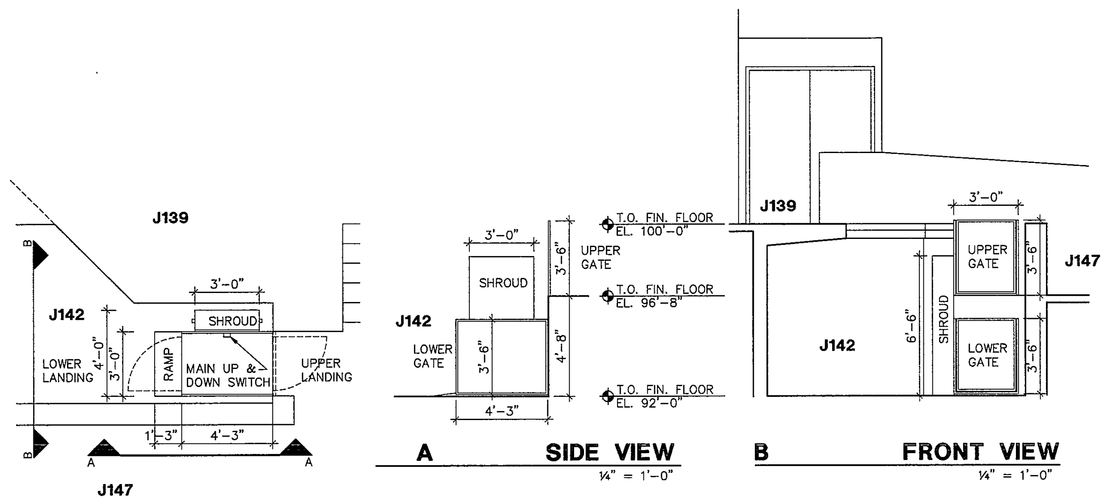

A SIDE VIEW

1/4" = 1'-0"

B FRONT VIEW

1/4" = 1'-0"

2 CHAIR LIFT AT UNIT J

1/4" = 1'-0"

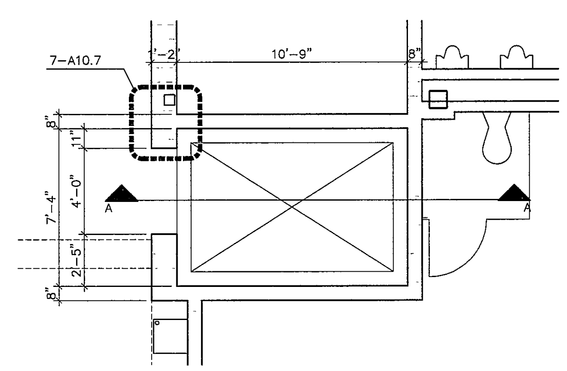

3 ELEVATOR - B118, E128

1/4" = 1'-0"

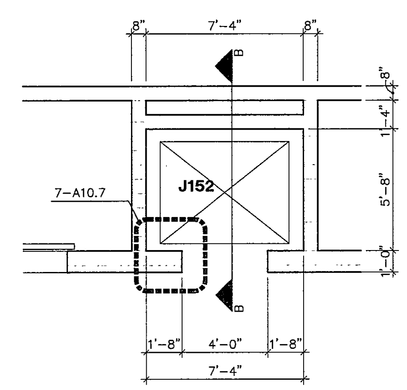

4 ELEVATOR - UNIT "J"

1/4" = 1'-0"

KEYNOTES

1. CMU – REFER TO PLANS FOR WIDTHS.
2. LAY-IN CEILING – REFER TO REFLECTED CEILING DRAWINGS FOR HEIGHTS.
3. PROVIDE 6" x 8" CUT OUT. SEE ELEVATOR MFR FOR LOCATION
4. CONCRETE PIT FOUNDATION WALL AND FOOTING. PROVIDE WATERPROOFING AND PROTECTIVE BOARD OVER WALL AND FOOTING.
5. DASHED LINE INDICATES STEEL LADDER. LADDER LOCATED ON OPPOSITE WALL.
6. 4" DIAMETER DRAIN TILE
7. 3 5/8" METAL STUDS AT 16" OC WITH 5/8" TYPE "X" GWB ON EACH SIDE.
8. STEEL BEAM -- REFER TO STRUCTURAL DRAWINGS.
9. EPOXY TERRAZZO OVER 3" CONC SLAB AND METAL DECK
10. TERRAZZO SET IN MUD BASE OVER 4" CONC SLAB OVER 6" MIN GRAVEL FILL
11. CONC FOUNDATION WALL SEE STRUCTURAL DWGS. PROVIDE WATERPROOFING AND PROTECTIVE BOARD OVER WALL AND FOOTING.
12. CMU WALL BEYOND
13. CONC SLAB
14. ELEVATOR FRAME BEYOND
15. STAINLESS STEEL SLIDING DOOR. SEE SPECIFICATION SECTION 14200
16. GROUT FULL
17. SILL SUPPORT ANGLE AND FASTENINGS BY ELEVATOR SUPPLIER. SEE SPECIFICATIONS SECTION 14200
18. SOLID CMU x 4" HIGH – REFER TO PLANS FOR WIDTHS.
19. 8" CMU LINTEL. SEE STRUCTURAL DRAWINGS
20. STAINLESS STEEL CLOSURE BY ELEVATOR MANUFACTURER
21. ELEVATOR FRAME –\SEE SPECIFICATION SECTION 14200
22. HORIZ JT REINF AT 16" OC
23. ANGLE 2"x 2"x 1/4" WITH ANCHOR AT 1'-0" OC. ANGLE TO RUN LENGTH OF DOOR
24. PROVIDE WATERPROOFING AND PROTECTIVE BOARD OVER WALL AND FOOTING
25. ELEV MFR TO PROVIDE CLOSURE ANGLE AS REQUIRED

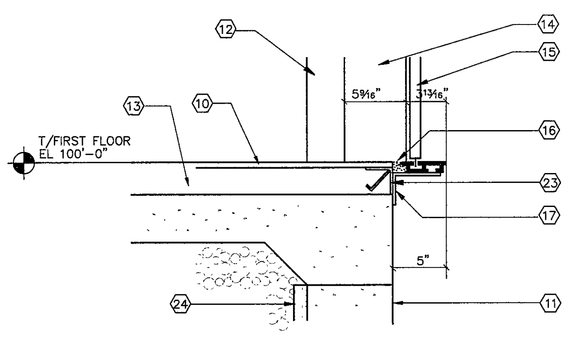

6 ELEV HOISTWAY SILL DETAIL

1½" = 1'-0"

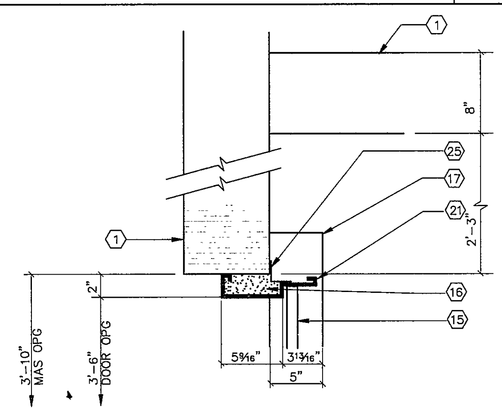

7 ELEV HOISTWAY JAMB DETAIL

1½" = 1'-0"

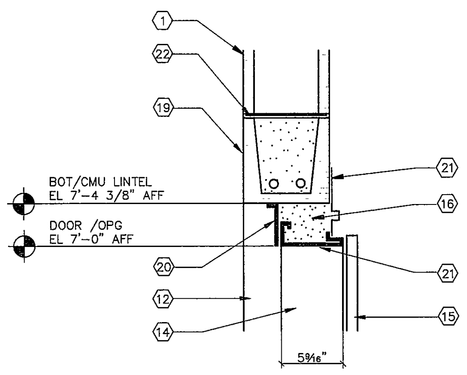

8 ELEV HOISTWAY HEAD DETAIL

1½" = 1'-0"

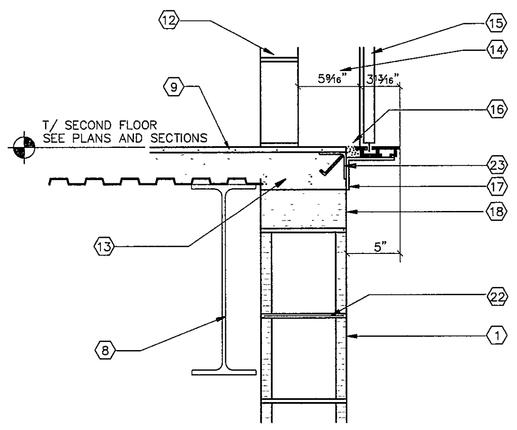

9 ELEV HOISTWAY SILL DETAIL

1½" = 1'-0"

97-A-180

COPYRIGHT 1997 BY FANNING/HOWEY ASSOCIATES, INC.

THOMAS M. WICKSTROM REGISTERED STATE OF INDIANA ARCHITECT

LEE BROCKMAN REGISTERED NO. 10866 STATE OF INDIANA ARCHITECT

THE NEW
CHESTERTON HIGH SCHOOL
FOR THE
DUNELAND SCHOOL CORPORATION
CHESTERTON, INDIANA

Fanning/Howey Associates, Inc.
Architects Engineers Consultants

STAIR DETAIL	
DRAWN BY: HAS, TCB	COMM. NO.: 95067.00
CHECKED BY: JHJ	DATE: APRIL 21, 1997
A10.7	REVISIONS NO. DATE

CHESTERTON HIGH SCHOOL
95067.00