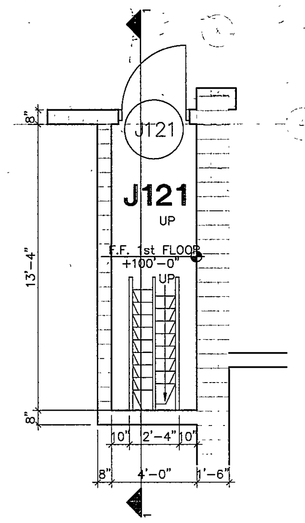

LOWER

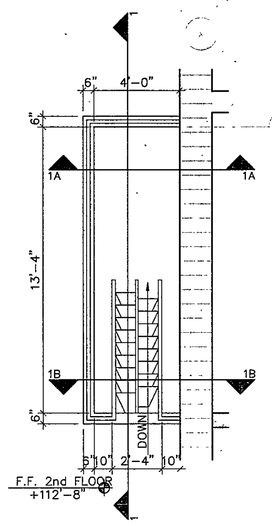

UPPER

STAIR PLANS
¼" = 1'-0"

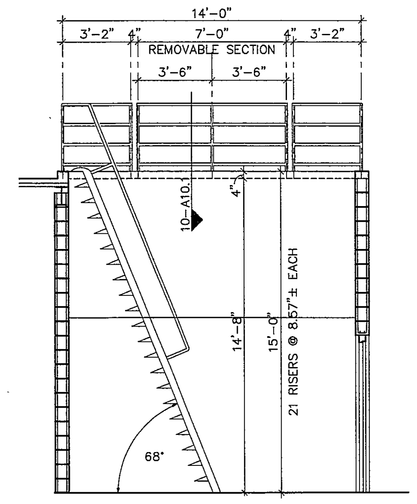

1 SECTION
¼" = 1'-0"

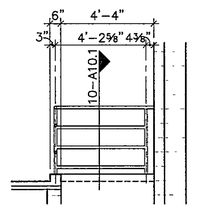

1A RAIL ELEV.
⅛" = 1'-0"

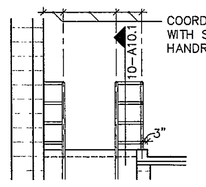

COORDINATE SPACING WITH SHIPS LADDER HANDRAIL SPACING.

1B RAIL ELEV.
⅛" = 1'-0"

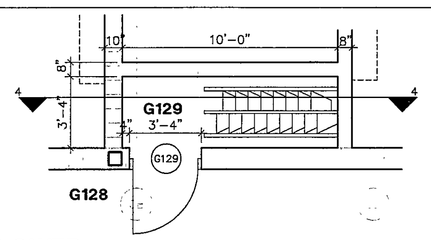

LOWER

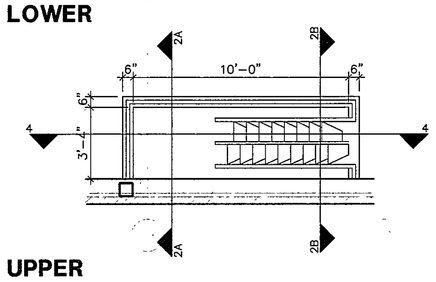

UPPER

STAIR PLANS
¼" = 1'-0"

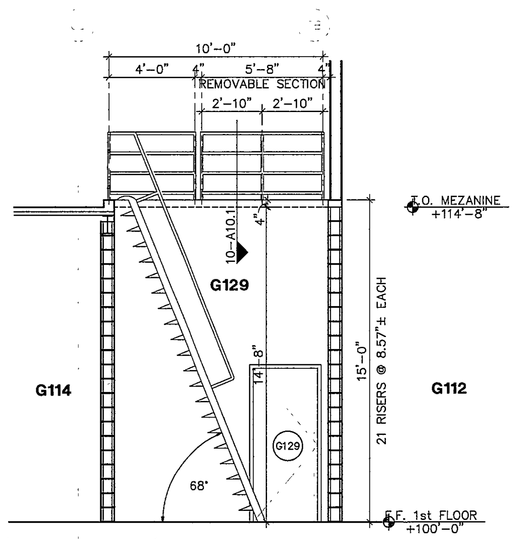

2 SECTION
¼" = 1'-0"

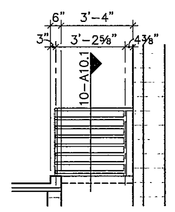

2A RAIL ELEV.
⅛" = 1'-0"

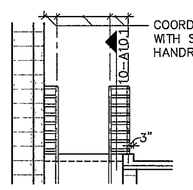

COORDINATE SPACING WITH SHIPS LADDER HANDRAIL SPACING.

2B RAIL ELEV.
⅛" = 1'-0"

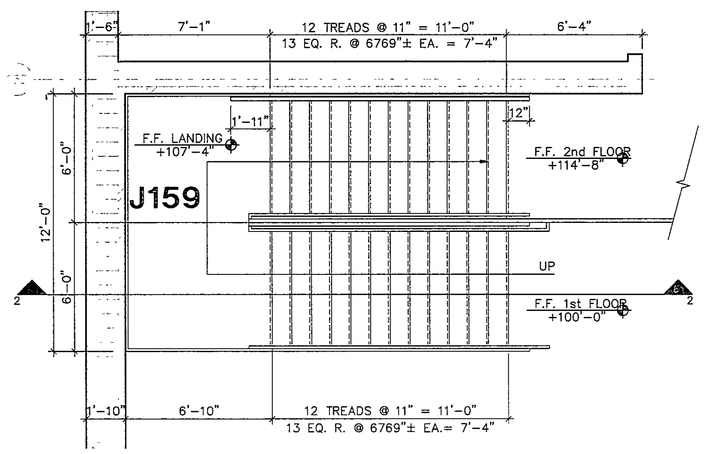

UPPER LEVEL STAIR PLAN
¼" = 1'-0"

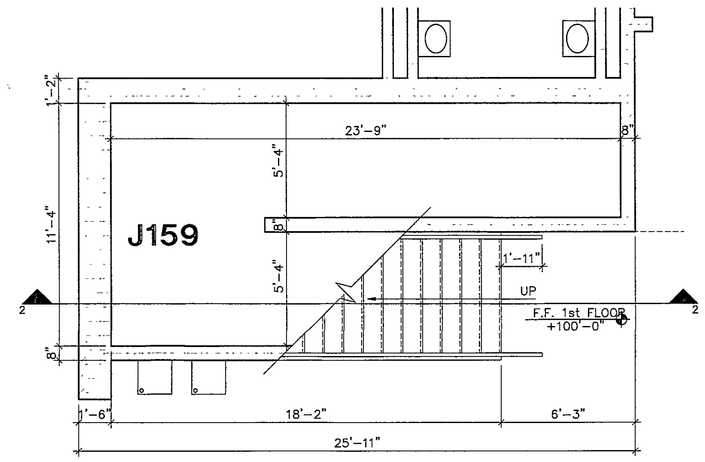

LOWER LEVEL STAIR PLAN
¼" = 1'-0"

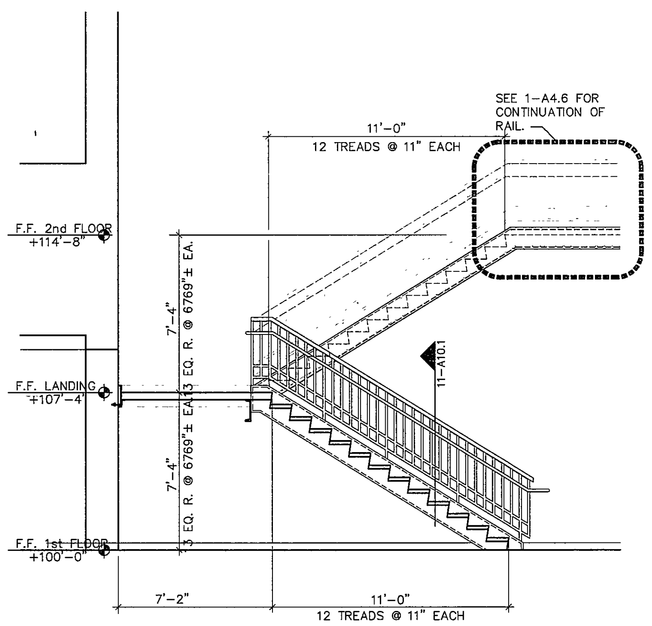

3 SECTION
¼" = 1'-0"

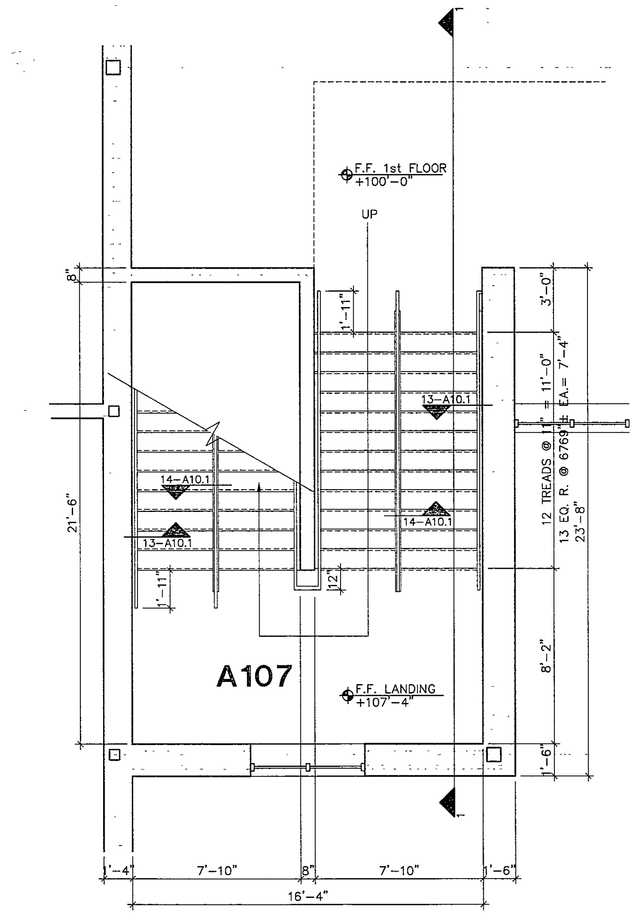

LOWER LEVEL STAIR PLAN
¼" = 1'-0"

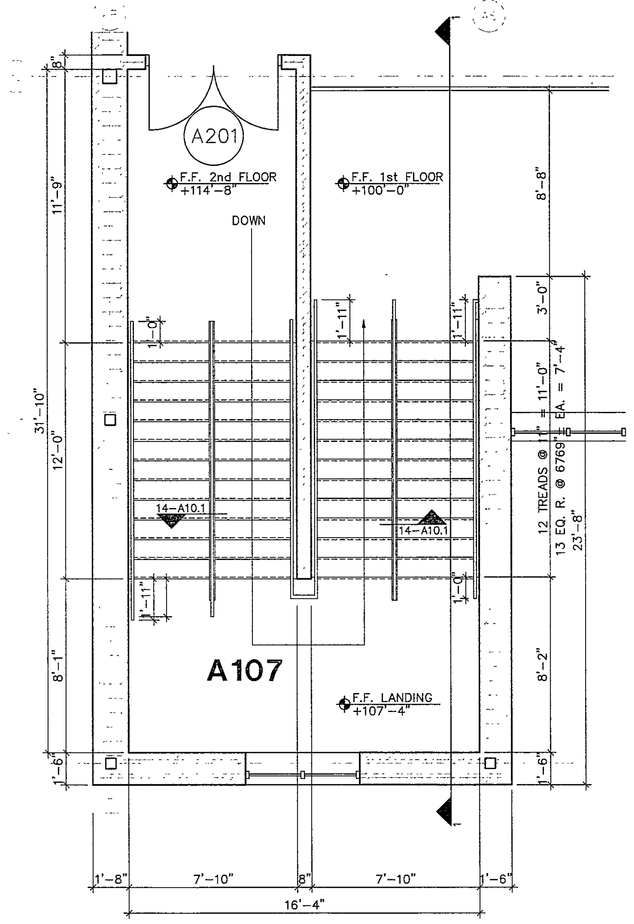

UPPER LEVEL STAIR PLAN
¼" = 1'-0"

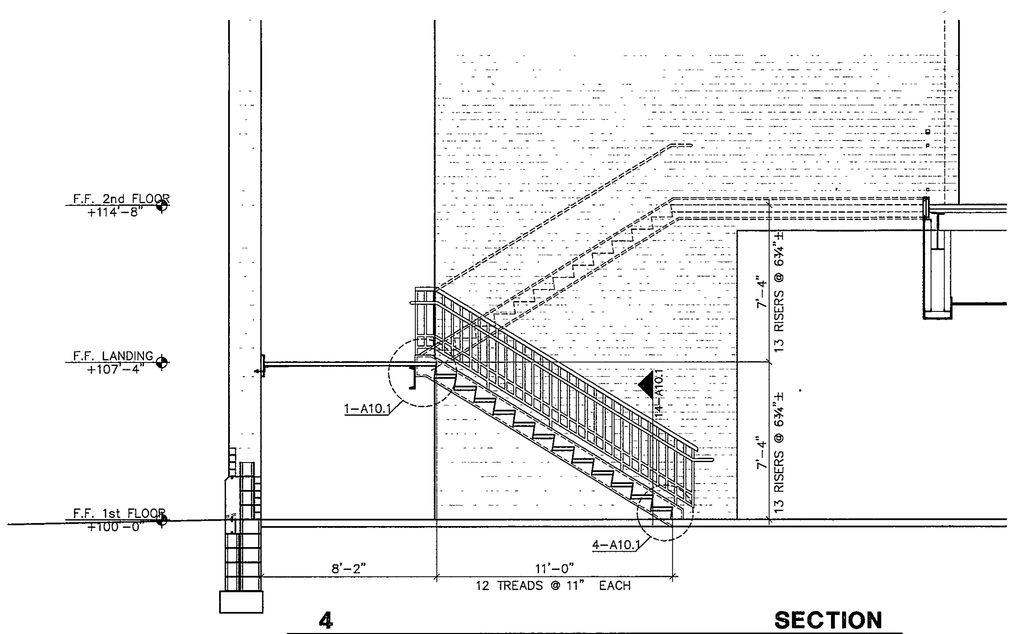

4 SECTION
¼" = 1'-0"

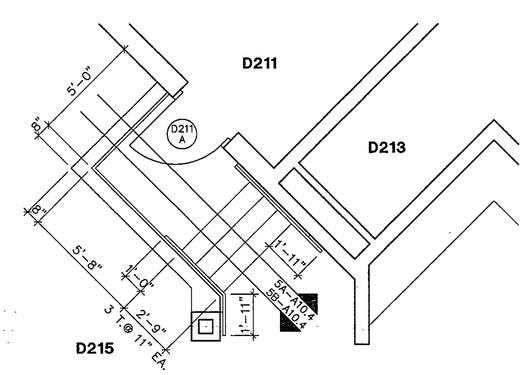

5 STAIR PLAN AT D215
¼" = 1'-0"

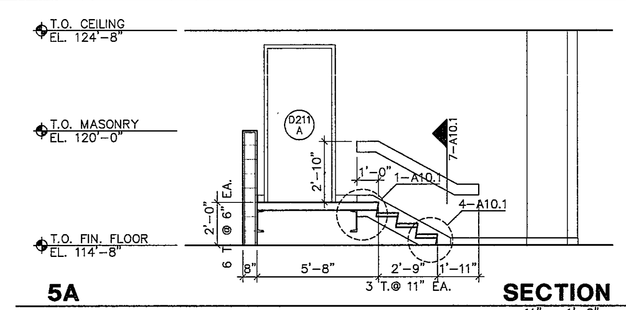

5A SECTION
¼" = 1'-0"

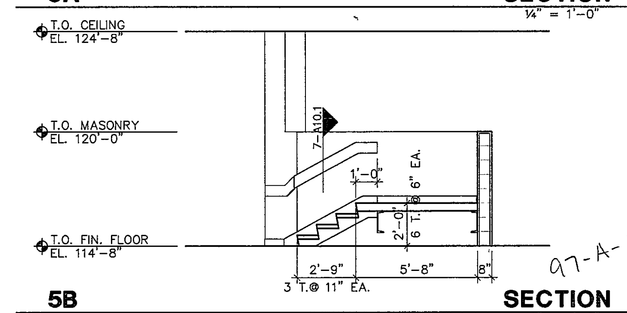

5B SECTION
¼" = 1'-0"

97-A-177

COPYRIGHT 1997 BY FANNING/HOWEY ASSOCIATES, INC.

DOUGLAS M. WICKSTROM
REGISTERED
No. 30062
STATE OF INDIANA
ARCHITECT

LEE BROCKSMITH
REGISTERED
No. 7366
STATE OF INDIANA
ARCHITECT

THE NEW
CHESTERTON HIGH SCHOOL
FOR THE
DUNELAND SCHOOL CORPORATION
CHESTERTON, INDIANA

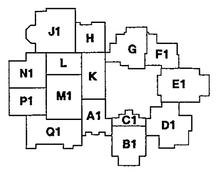

Fanning/Howey Associates, Inc.
Architects Engineers Consultants

ENLARGED STAIR PLAN
(101 A VOL. 1)

DRAWN BY:	HAS, TCB	COMM. NO.:	95067.00
CHECKED BY:	JHJ	DATE:	APRIL 21, 1997

REVISIONS NO. DATE

A10.4

CHESTERTON HIGH SCHOOL
95067.00