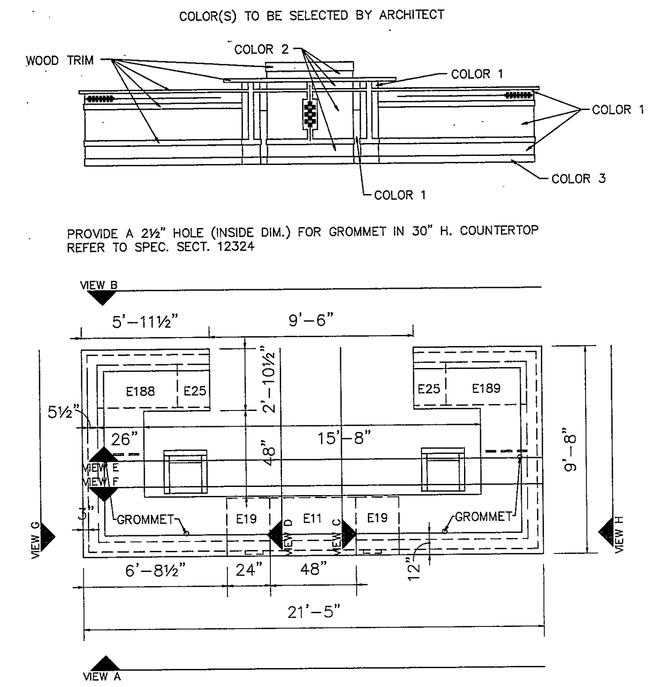

1 A122 RECEPTION COUNTER
¼"=1'-0"

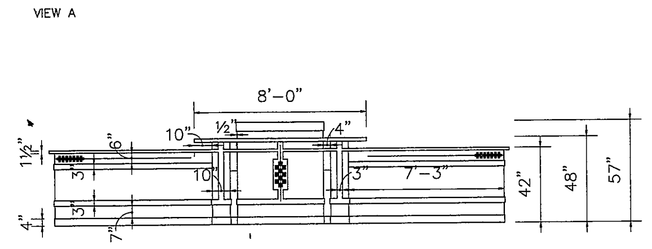

2 A122 RECEPTION COUNTER
¼"=1'-0"

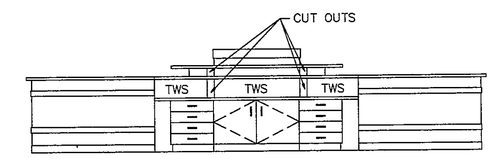

3 A122 RECEPTION COUNTER
¼"=1'-0"

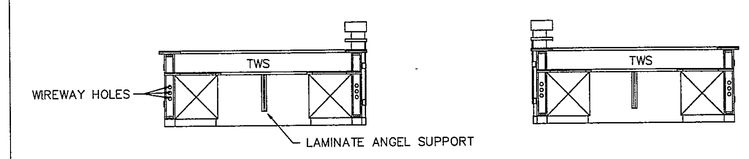

4 A122 RECEPTION COUNTER
¼"=1'-0"

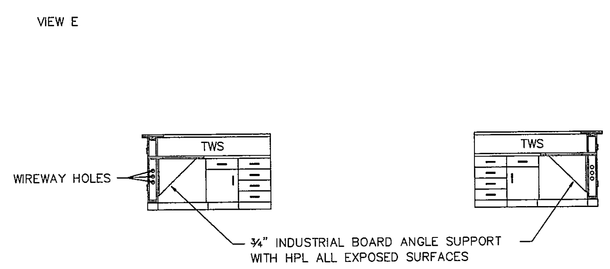

5 A122 RECEPTION COUNTER
¼"=1'-0"

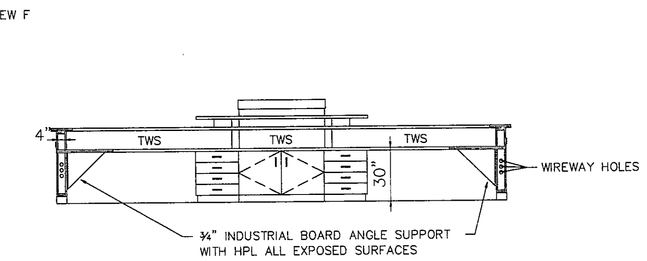

6 A122 RECEPTION COUNTER
¼"=1'-0"

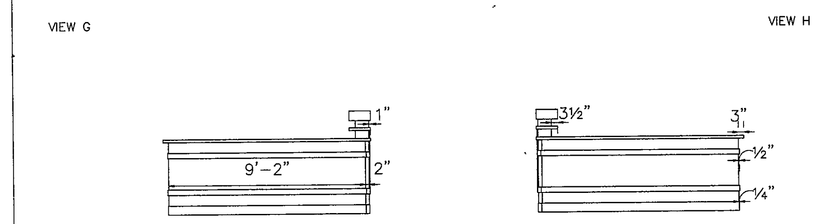

7 A122 RECEPTION COUNTER
¼"=1'-0"

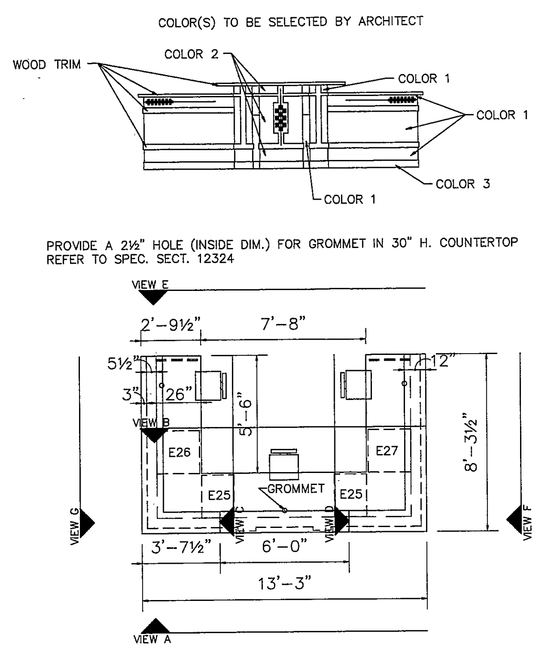

8 A146 RECEPTION COUNTER
¼"=1'-0"

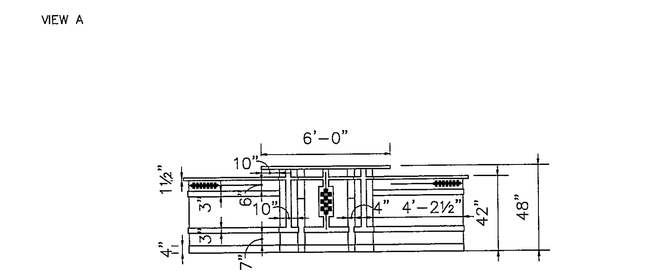

9 A146 RECEPTION COUNTER
¼"=1'-0"

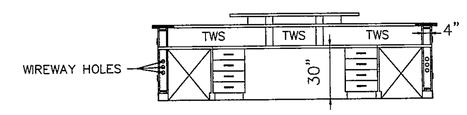

10 A146 RECEPTION COUNTER
¼"=1'-0"

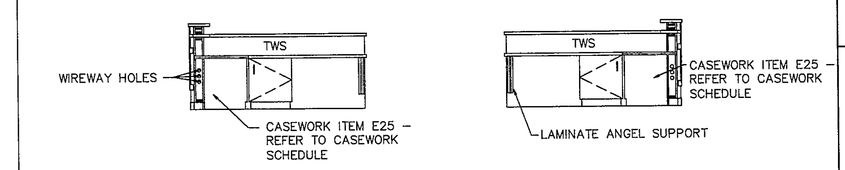

11 A146 RECEPTION COUNTER
¼"=1'-0"

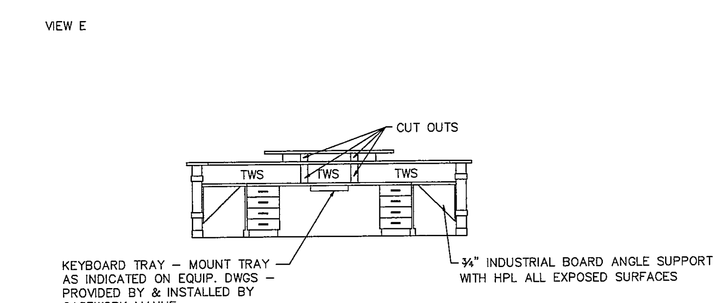

12 A146 RECEPTION COUNTER
¼"=1'-0"

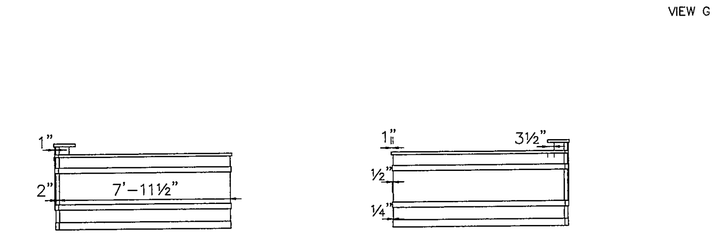

13 A146 RECEPTION COUNTER
¼"=1'-0"

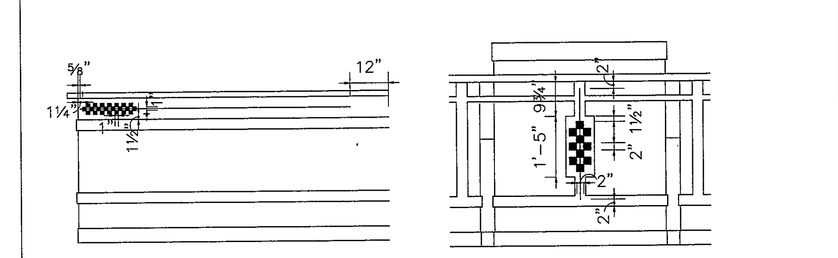

14 WHEAT DESIGN
½"=1'-0"

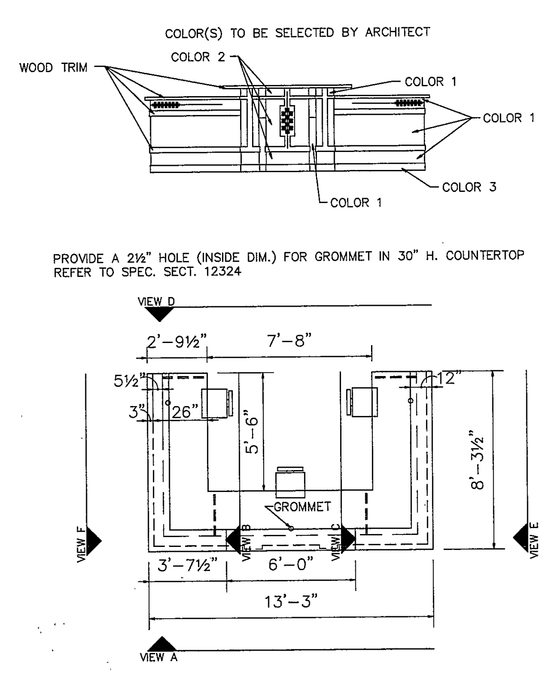

15 K105 RECEPTION COUNTER
¼"=1'-0"

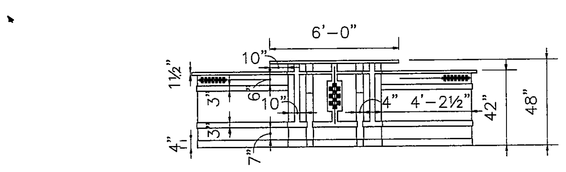

16 K105 RECEPTION COUNTER
¼"=1'-0"

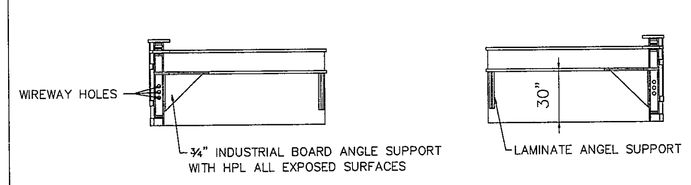

17 K105 RECEPTION COUNTER
¼"=1'-0"

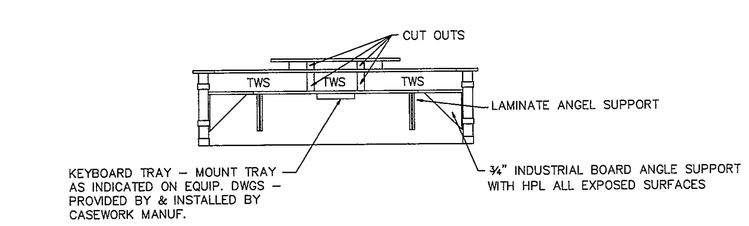

18 K105 RECEPTION COUNTER
¼"=1'-0"

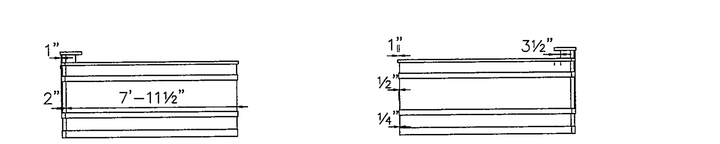

19 K105 RECEPTION COUNTER
¼"=1'-0"

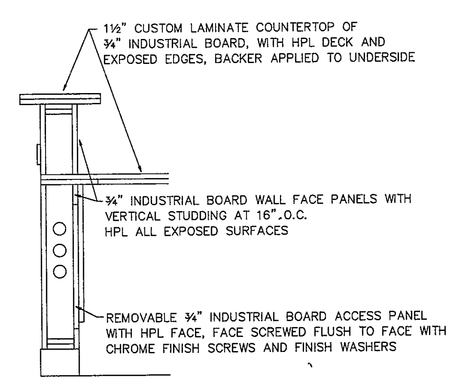

20 TYPICAL POST SECTION
¼"=1'-0"

97-A-135

COPYRIGHT 1997 BY FANNING/HOWEY ASSOCIATES, INC.

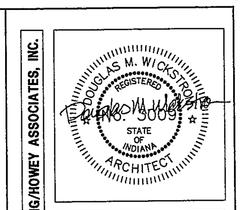

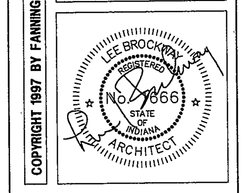

THE NEW
CHESTERTON HIGH SCHOOL
FOR THE
DUNELAND SCHOOL CORPORATION
CHESTERTON, INDIANA

Fanning/Howey Associates, Inc.
Architects Engineers Consultants

COUNTER DETAILS

DRAWN BY: DCN
CHECKED BY: JHJ
COMM. NO.: 95067.00
DATE: APRIL 21, 1997

REVISIONS NO. DATE

A7.31

CHESTERTON HIGH SCHOOL
95067.00