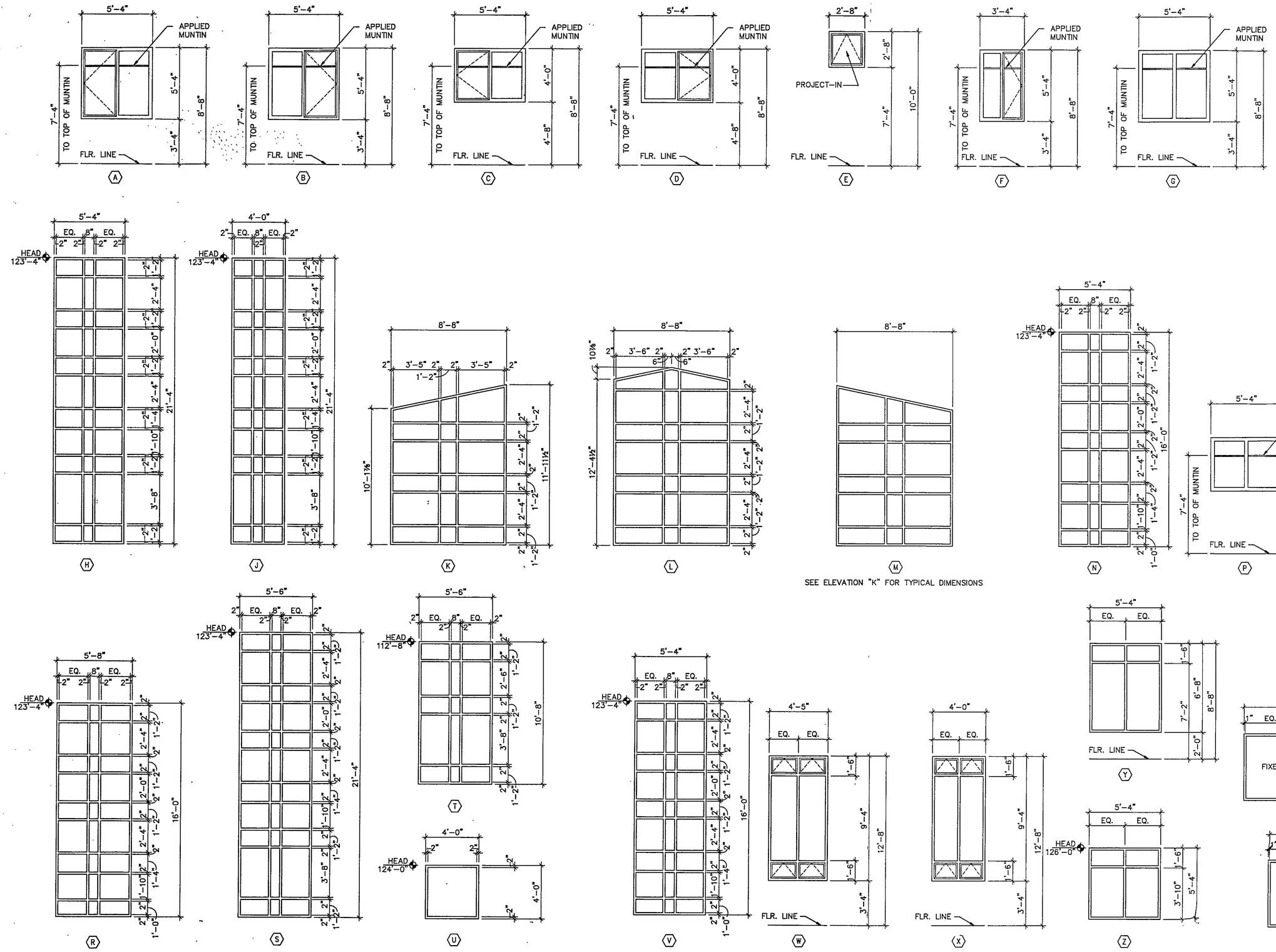

WINDOW MARK	HEAD	JAMB	SILL	REMARKS	WINDOW MARK	HEAD	JAMB	SILL	REMARKS
A	5-A6.2	6-A6.2	12-A6.2	SEE NOTE 4	J	23-A6.3	34-A6.3	29-A6.3	
A	1-A6.2	2-A6.2	10-A6.2	SEE NOTE 5	K	3-A5.1	34-A6.3	3-A5.1	
A	1-A6.2	2-A6.2	8-A6.2	SEE NOTE 6	L	3-A5.1	34-A6.3	3-A5.1	
A	7-A6.2	13-A6.2	14-A6.2	SEE NOTE 7	M	3-A5.1	34-A6.3	3-A5.1	
B	5-A6.2	6-A6.2	12-A6.2	SEE NOTE 4	N	5-A6.3	17-A6.3	11-A6.3	
B	1-A6.2	2-A6.2	10-A6.2	SEE NOTE 5	P	1-A6.3	13-A6.3	7-A6.3	
B	1-A6.2	2-A6.2	8-A6.2	SEE NOTE 6	Q	2-A6.3	14-A6.3	8-A6.3	
B	7-A6.2	13-A6.2	14-A6.2	SEE NOTE 7	R	4-A6.3	16-A6.3	22-A6.3	SEE 10-A1.34
C	5-A5.2	6-A6.2	12-A6.2 SIM.	SEE NOTE 8	S	4-A6.3	16-A6.3	22-A6.3	SEE 10-A1.34
C	1-A6.2	2-A6.2	9-A6.2	SEE NOTE 6	T	19-A6.3	30-A6.3	25-A6.3	
C	4-A6.2	3-A6.2	11-A6.2	SEE NOTE 9	U	21-A6.3	32-A6.3	27-A6.3	
D	5-A5.2	6-A6.2	12-A6.2	SEE NOTE 8	V	28-A6.3	5/6-A1.37	33-A6.3	SEE 24-A6.3
D	1-A6.2	2-A6.2	9-A6.2	SEE NOTE 6	W	3-A6.3	15-A6.3	9-A6.3	
D	4-A6.2	3-A6.2	11-A6.2	SEE NOTE 9	X	3-A6.3	15-A6.3	9-A6.3	
E	5-A6.2	6-A6.2	12-A6.2	SEE NOTE 4	Y	6-A6.3	18-A6.3	12-A6.3	
E	7-A6.2	13-A6.2	14-A6.2	SEE NOTE 7	Z	20-A6.3	31-A6.3	26-A6.3	
F	7-A6.2	13-A6.2	14-A6.2		AA	35-A6.3	36-A6.3	37/38-A6.3	
G	7-A6.2 SIM.	13-A6.2 SIM.	14-A6.2 SIM.	SEE NOTE 10	BB	22-A6.4	23-A6.4	24-A6.4	
H	23-A6.3	34-A6.3	29-A6.3		CC	22-A6.4	23-A6.4	24-A6.4	

NOTES:
1. REFER TO SPEC. SECTION 08520 FOR WINDOWS A, B, C, D, E, F, G, P, W, X, AA, BB, & CC.
2. REFER TO SPEC. SECTION 08120 FOR WINDOWS H, J, K, L, M, N, Q, R, S, T, U, Y, & Z.
3. REFER TO SPEC. SECTION 07815 FOR WINDOW V.
4. WINDOWS LOCATED IN 14" MASONRY CAVITY WALL ON FIRST FLOOR.
5. WINDOWS LOCATED IN FACE BRICK/ METAL STUD WALL ON FIRST FLOOR.
6. WINDOWS LOCATED IN FACE BRICK/ METAL STUD WALL ON SECOND FLOOR.
7. WINDOWS LOCATED IN 16" MASONRY CAVITY WALL.
8. WINDOWS LOCATED IN 14" MASONRY CAVITY WALL ON SECOND FLOOR.
9. WINDOWS LOCATED IN FACE BRICK/ METAL STUD WALL IN ROOMS D203, D204, D205, AND D206.
10. WINDOWS LOCATED IN 18" MASONRY CAVITY WALL.

KEYNOTES

1. CMU
2. CAST STONE SILL - REFER TO SECTION 04720
3. CAST STONE PANEL - REFER TO SECTION 04720
4. CMU LINTEL. REFER STRUCTURAL DRAWINGS
5. STEEL LINTEL. REFER STRUCTURAL DRAWINGS
6. FACE BRICK
7. 2" RIGID CAVITY INSULATION
8. WALL BEYOND
9. THRU-WALL FLASHING WITH WEEP HOLES
10. TREATED WOOD BLOCKING
11. IN-WALL FLASHING - REFER TO SECTION 07600
12. SEALANT WITH BACKER ROD
13. WOOD SHIM AND SEALANT WITH BACKER ROD BOTH SIDES
14. ALUMINUM FRAME - REFER TO SECTION 08120
15. ALUMINUM WINDOW - REFER TO SECTION 08520
16. INTERIOR ALUMINUM WINDOW TRIM - REFER TO SECTION 08520
17. PREFINISHED ALUMINUM SILL
18. ALUMINUM FRAME - REFER TO SECTION 07815
19. INSULATED SKYLIGHT PANEL - REFER TO SECTION 07815
20. GLAZING - REFER TO SECTION 08800
21. 6" METAL STUDS AT 16" O.C.
22. METAL STUD FRAMING
23. 5/8" FIBER-REINFORCED GYPSUM WALLBOARD
24. 6" BATT INSULATION
25. 1/2" GYPSUM SHEATHING
26. 7/8" MARBLE STOOL
27. ACT CEILING

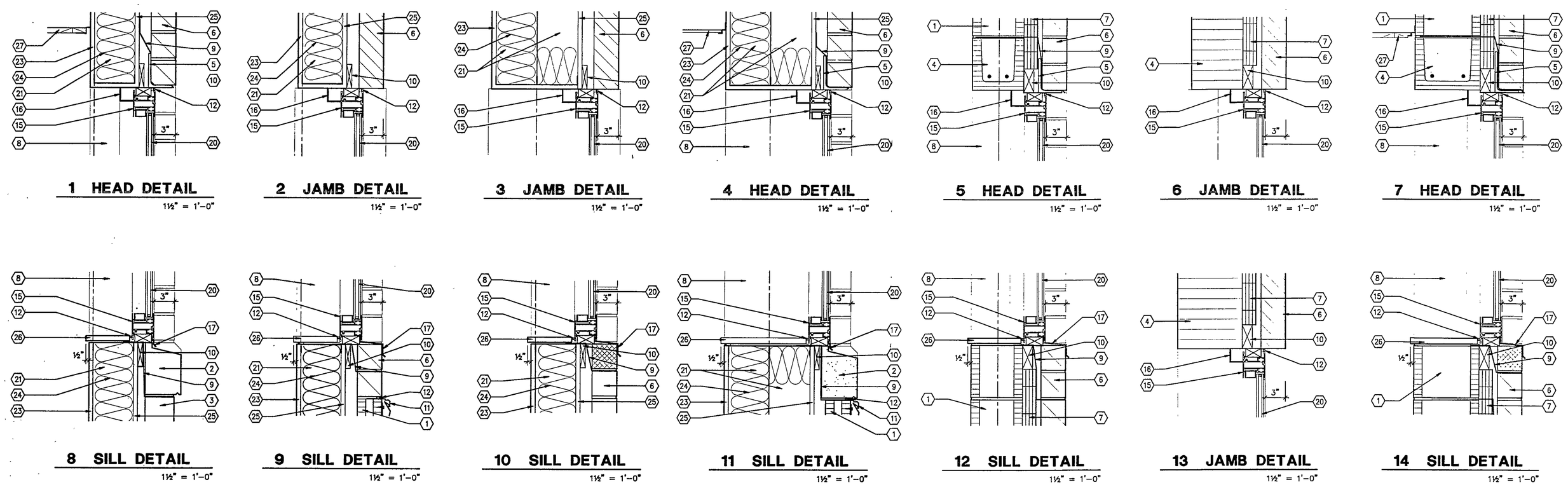

1 HEAD DETAIL 1½" = 1'-0"
2 JAMB DETAIL 1½" = 1'-0"
3 JAMB DETAIL 1½" = 1'-0"
4 HEAD DETAIL 1½" = 1'-0"
5 HEAD DETAIL 1½" = 1'-0"
6 JAMB DETAIL 1½" = 1'-0"
7 HEAD DETAIL 1½" = 1'-0"
8 SILL DETAIL 1½" = 1'-0"
9 SILL DETAIL 1½" = 1'-0"
10 SILL DETAIL 1½" = 1'-0"
11 SILL DETAIL 1½" = 1'-0"
12 SILL DETAIL 1½" = 1'-0"
13 JAMB DETAIL 1½" = 1'-0"
14 SILL DETAIL 1½" = 1'-0"

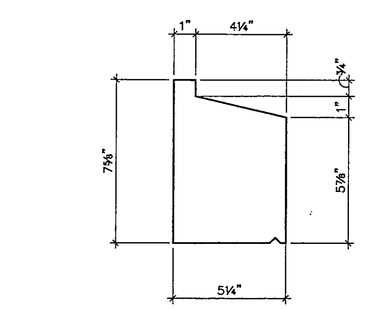

15 CAST STONE SILL DETAIL 3" = 1'-0"

97-A-102

COPYRIGHT 1997 BY FANNING/HOWEY ASSOCIATES, INC.

THE NEW
CHESTERTON HIGH SCHOOL
FOR THE
DUNELAND SCHOOL CORPORATION
CHESTERTON, INDIANA

Fanning/Howey Associates, Inc.
Architects Engineers Consultants

DOOR & WINDOW DETAILS

DRAWN BY: JHL RIC COMM. NO.: 95067.00
CHECKED BY: JHJ DATE: APRIL 21, 1997

REVISIONS NO. DATE

A6.2

CHESTERTON HIGH SCHOOL
95067.00