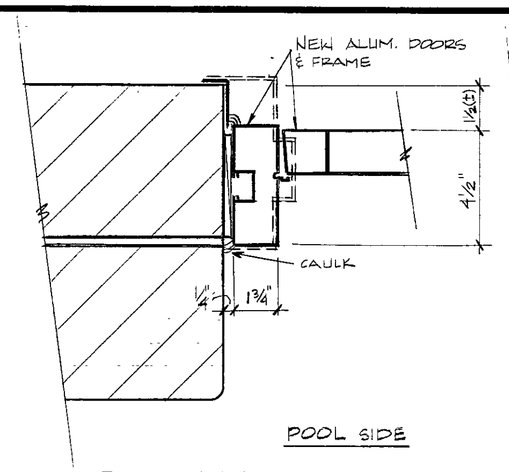

1 A-7 JAMB

3" = 1'-0"

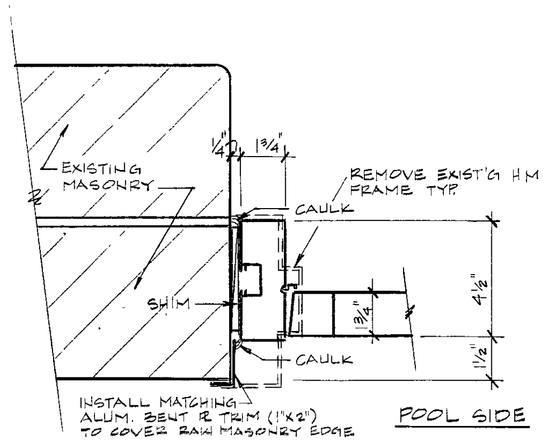

3 A-7 JAMB

3" = 1'-0"

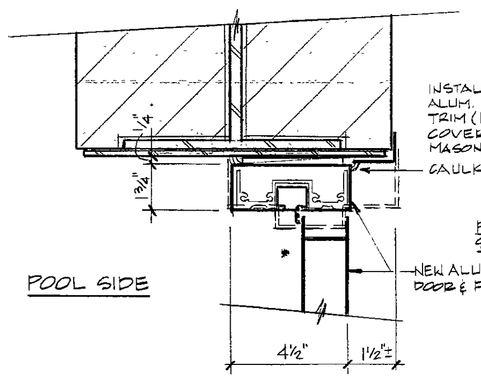

2 A-7 HEAD

3" = 1'-0"

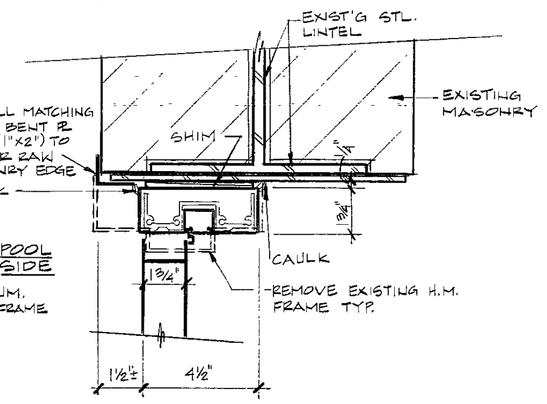

4 A-7 HEAD

3" = 1'-0"

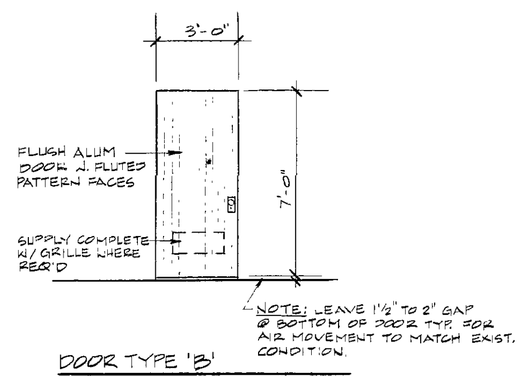

DOOR TYPE 'B'

¼" = 1'-0"

(TYP. FOR ALL NEW SWIMMING POOL AREA ALUMINUM DOORS, ALT. BID AE-1)

NOTES

1. ALUM. FRAMING MEMBERS INCLUDING JAMBS, HEAD & SIDELITE, FRAMING SHALL BE EQUAL TO KAWNEER TRIFAB '450' OR TUBELITE BRAND, 1¾" x 4½" SIZE TYP
2. SALVAGE EXISTING LOCKSETS / PUSH/PULL HARDWARE FROM EXISTING DOORS FOR REINSTALLATION IN NEW DOORS. SEE HARDWARE SET '1066' SPEC. 08700-3. NEW HINGE BUTTS REQUIRED (NO CLOSERS OR EXIT DEVICES REQUIRED).

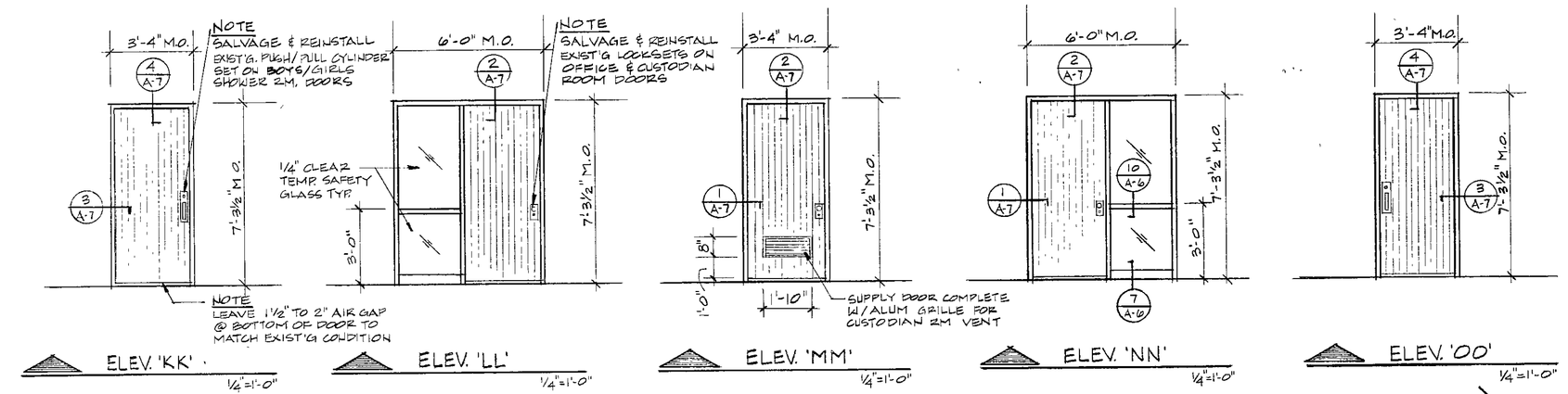

ELEV. 'KK' 1/2" = 1'-0" | ELEV. 'LL' 1/4" = 1'-0" | ELEV. 'MM' 1/4" = 1'-0" | ELEV. 'NN' 1/4" = 1'-0" | ELEV. 'OO' 1/4" = 1'-0"

ALT. BID #AE-1

(CONTRACT #2)

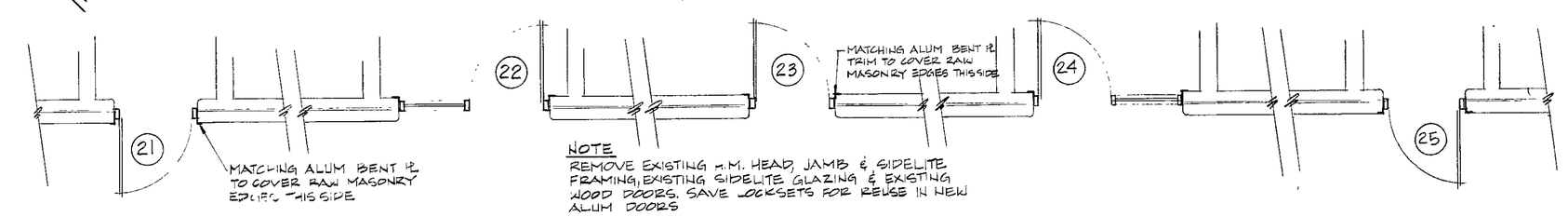

SWIMMINING POOL REPLACEMENT DOOR PLAN

¼" = 1'-0"

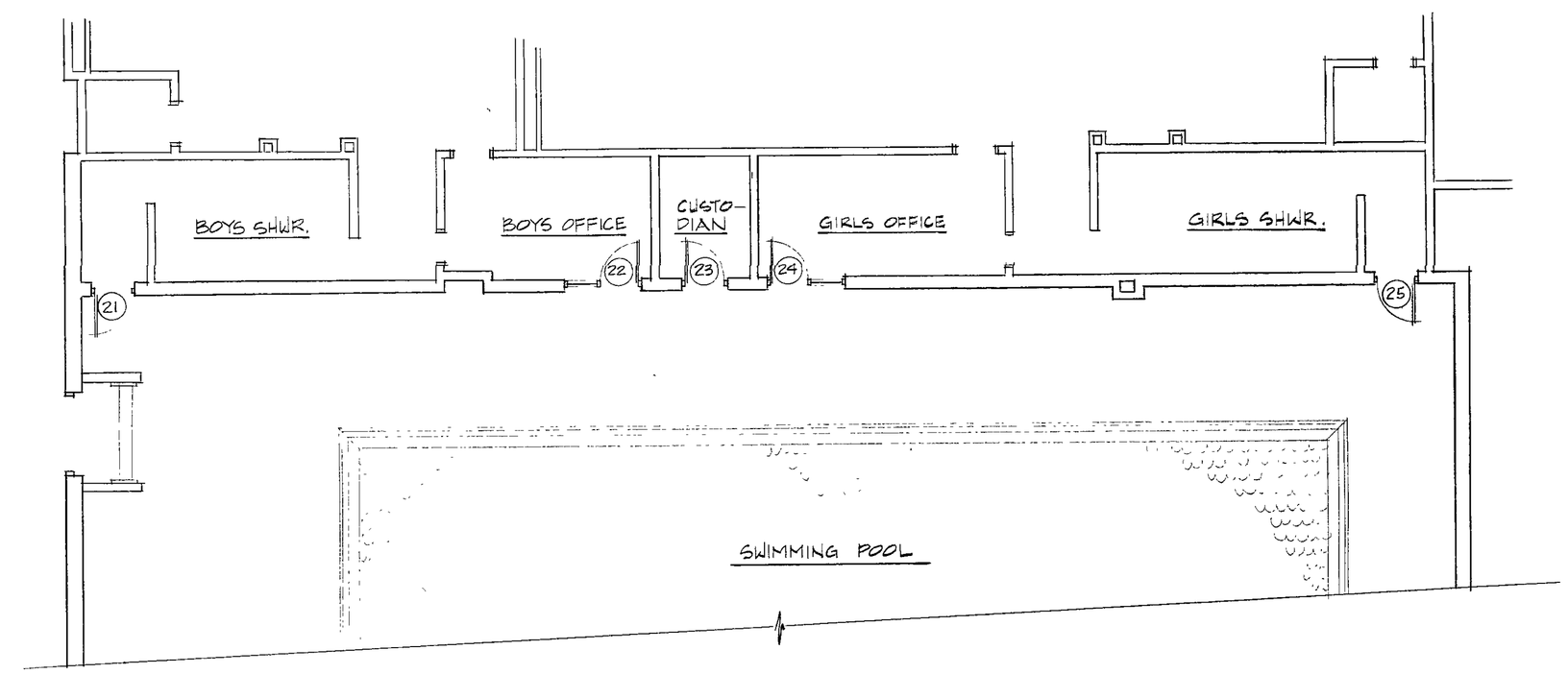

SWIMMING POOL AREA PLAN

1/8" = 1'-0"

DESCRIPTION OF ALTERNATES (Spec. Sect. 1100)

PARTIAL ALUMINUM ENTRY REPLACEMENT CONTRACT #2 (AE)

AE-1: If new Swimming Pool Area replacement interior aluminum doors and frames as described and detailed on Drawing Sheet A-7 are added to Base Bid aluminum entry door and frame scope of work:

ADD $_____

AE-2: If Base Bid Kawneer Tuffline 350 System portions of new aluminum entrys are changed to standard Kawneer Trifab 450 System, or to equivalent aluminum entry system as manufactured by Amarlite Anaconda or by PPG Industries with medium stile aluminum entry doors:

DEDUCT $_____

AE-3: If Base Bid Von Duprin Model 33 Rim Exit Devices and matching removable meeting stile mullions are changed to Russwin Designer Bolt 572 series Rim Exit Device with Tuffline removable mullion (or similar first-line quality heavy-duty Rim Exit Devices as manufactured by Sargent Co. or Dor-O-Matic):

ADD $_____ DEDUCT $_____

AE-4: If new Interior Vestibule aluminum entry doors #13, 14, 17 & 18 and their frames and hardware located at Entrys #4 and #5 (see Drawing Sheet A-6) are deleted from the scope of the Project Base Bid Work (i.e., original existing H.M. entrys to remain)

DEDUCT $_____

CASH ALLOWANCES (Spec. Sect. 0400)

CASH ALLOWANCES: Cash allowances, as described in the General Conditions and the various technical sections, shall be included as follows:

Alum. Entry Replacement Prime Contractor	$1,750.00	New Exterior Lock Cylinder:
Alum. Entry Replacement Prime Contractor	$1,750.00	Additional Work
TOTAL CASH ALLOW. CONTRACT #2	$3,500.00	

INCLUSION IN BID: The above ALLOWANCES shall be included in the Base Bids of contracts #1 or #2 (as applicable) by the respective Prime Contractors.

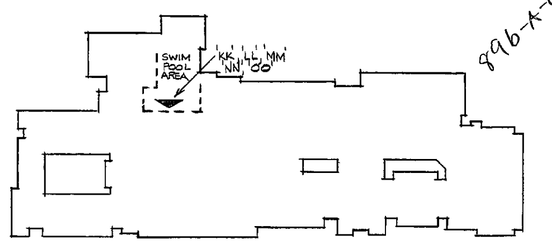

KEY PLAN

NORTH

996-A-06

REVISIONS	BY

ALUM. ENTRY ALT. BID WORK

CHESTERTON HIGH SCHOOL WINDOWWALL REPLACEMENT

DUNELAND SCHOOL CORPORATION chesterton, indiana

gerometta & kinel architects, inc.

DATE	JAN. 19, 1989
SCALE	AS NOTED
DRAWN	DJK. RB
JOB	8901D
SHEET	A-7 OF 7 SHEETS