CHESTERTON HIGH SCHOOL PARTIAL REROOFING

DUNELAND SCHOOL CORPORATION

CHESTERTON, INDIANA

DUNELAND SCHOOL BOARD

TERRY K. HIESTAND, president
JOHN W. KROFT, vice pres.
DONALD E. MEEK, secretary
ROBERT G. MATTHYS, member
RAYMOND YAGELSKI JR., member

DR. KENNETH L. PAYNE, SUPERINTENDENT

MICHAEL C. HARRIS, BOARD ATTORNEY

geometta & kinel architects, inc.

chesterton, indiana

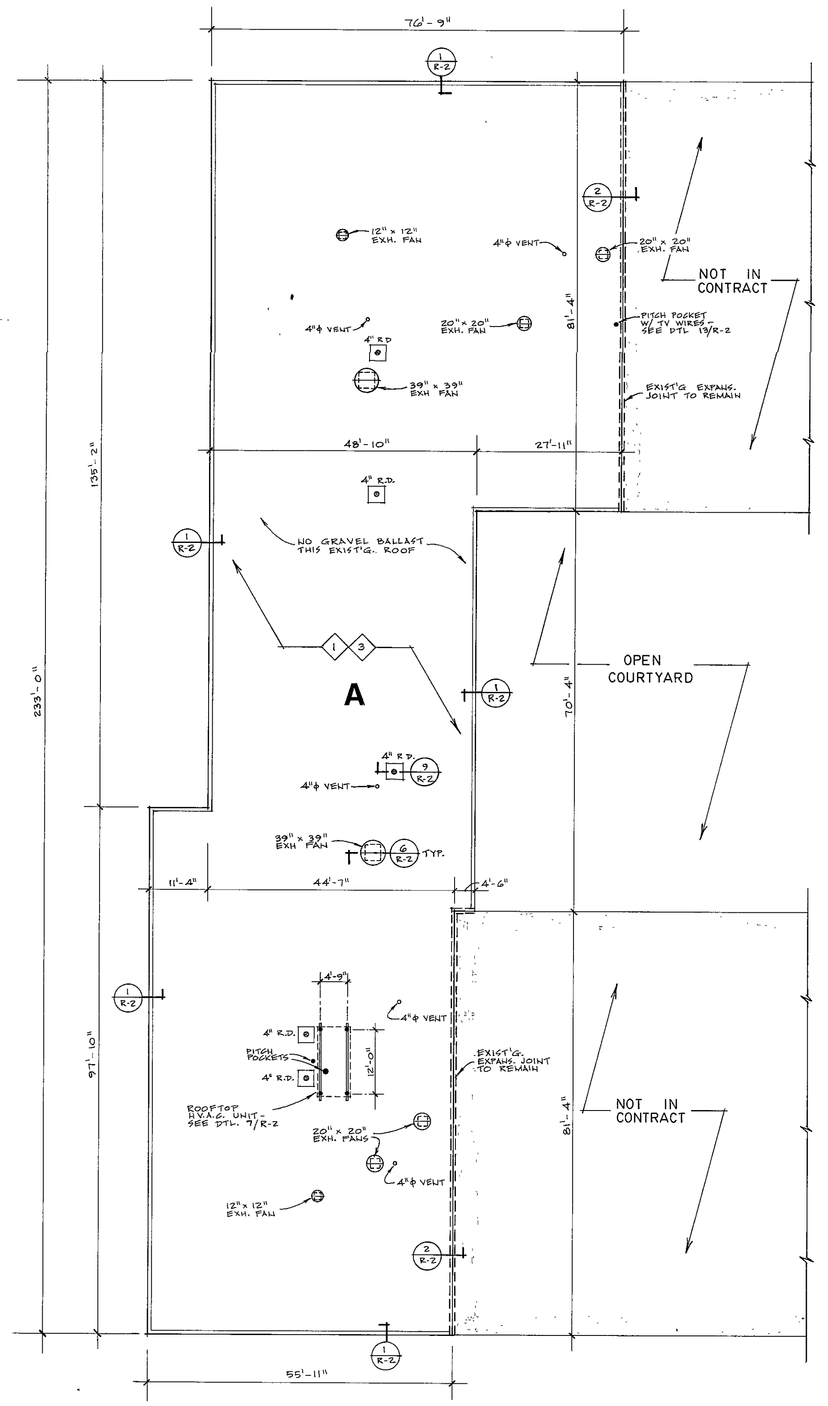

ROOF PLAN - AREA "A"

1/16" = 1'-0"

CHESTERTON HIGH SCHOOL ROOF NOTES

DEMOLITION NOTES (also see Spec. Section 1010 - Summary of Work)

1. Remove existing metal flashing/or drip edge.
2. Remove existing pitch pockets.
3. Raise existing vent & fan curbs if req'd. as shown to maintain min. 8" ht. above new roof.
4. Generally: Power sweep off existing ballast where shown and cut out major blister areas.
5. Remove & reinstall existing expansion joint covers. (Unless shown to be replaced w/new expansion joint cover)

SPECIFIC NOTES

1. New single-ply .060" membrane roofing (adhered)
2. New single-ply .045" membrane roofing (ballasted)
3. New 2.2" faced Isocynurate insulation over entire area. Fasten thru new insulation board and existing built-up roof into existing 1-½" metal deck w/Manville premium corrosion resistant ultra-fast self-tapping screws w/galvanized metal plates. Fastener to be applied with a minimum of 1 fastener per each 2 s.f. of roof area to fully comply w/ I-90 FM wind uplift requirements.(ADHERED MEMBRANE SYSTEM)
4. New treated blocking, nominal 1" & 2" thickness as detailed. Spike or screw to existing construction for I-90 uplift rating.
5. New flashing strip banded per Mfgr's recommendations.
6. New 24 ga. s.s. drip edge or gravel stop as detailed with concealed clips.
7. New metal dam extension to raise pitch pockets. Maintain min. 2" above new roof.
8. New 2.2" faced Isocynurate insulation over ballasted roof area. Adhere or fasten insulation in place to hold position until membrane and 10 lb./sq.ft. stone ballast placed. (Ballasted Membrane System)
9. Field Molded pipe flashing
10. Stainless steel clamping ring.
11. Cont. SPM Anchor Bar.
12. New 3/4" Fesoboard Insulation.
13. NEW ½" FESOBOARD INSULATION

GENERAL NOTES

1. Also see Roofing Spec.Section "550 for typical details, on pipe flashing, pitch pockets, parapets, roof vents, etc. (These details may vary somewhat per Mfgr.).
2. All details shown on both sheets (except sheet metal coping & gravel stop) will vary somewhat per Mfgr's. standard details.
3. "Existing Construction" conditions shown on Drawings are given to assist Bidders in preparing their Proposal. These details approximate existing configurations & dimensions and will vary somewhat in the field. It remains the Contractor's responsibility to visit the Project & ascertain existing conditions to his own satisfaction.
4. Note that both .060" Adhered EPDM Rubber Membrane and .045" Ballasted EPDM Rubber Membrane are used on this project. See locations as shown on Drawing Sheet R-1. ~~(AREA "A" for Adhered and AREA "B" for Ballasted)~~

NOTE:

IN GENERAL, ALL ROOFS SHOWN CONSIST OF EXISTING BUILT-UP ROOFING ON APPROX. 1½" RIGID INSUL. W/ METAL DECK & STEEL BAR JOIST SUPPORTS.

EXCEPTIONS:

1. PORTION OF ROOF AREA 'B' OVER LIBRARY WHICH CONSISTS OF BUILT-UP ROOFING ON 2" TO 4" POURED CONCRETE W/ METAL DECK & STEEL BAR JOIST SUPPORTS.
2. PORTIONS OF 2/12 PITCH ROOF AREA 'B' (EACH SIDE OF LIBRARY) WHICH CONSIST OF BUILT-UP ROOFING ON APPROX. 1" RIGID INSULATION ON 4" POURED STRUCTURAL CONCRETE DECK.

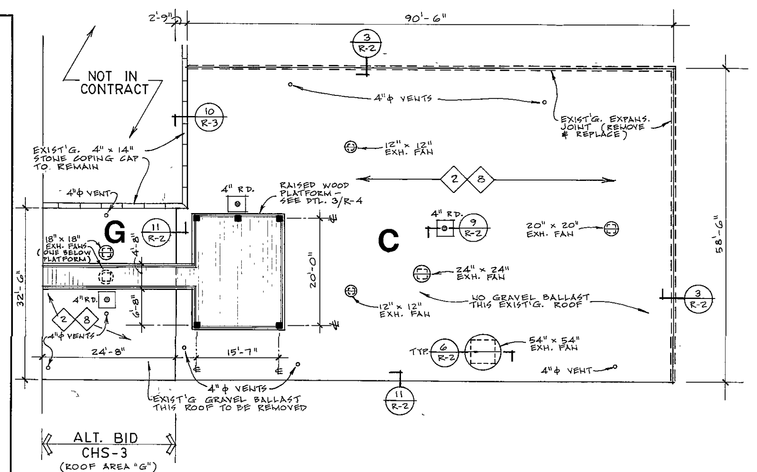

ROOF PLAN - AREA "C"

1/16" = 1'-0"

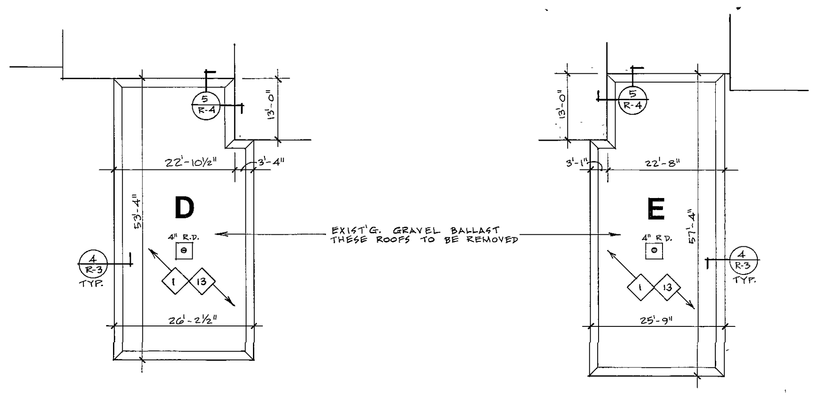

ROOF PLANS - AREAS "D" & "E"

(CANOPIES)

1/16" = 1'-0"

CONTRACT #1: CHESTERTON HIGH SCHOOL (CHS) REROOFING
State the Amount:

CHS-1: If "Pac-Clad" or "Colorklad" .040" prefinished Alum. is used for gravel stops & exposed drip edges (exposed fasteners) in lieu of Base Bid 24 ga. stainless steel (Spec. Sect. 7650) for Roof Areas 'A', 'D', & 'E' (Details 1/R-2 & 4/R-3) and Roof Area 'B' except Library Roofs (Details 1/R-4, 2/R-4, 4/R-4 & 6/R-3) at Chesterton High School.

ADD $_____

CHS-2: If prefabricated roofing vents, compatible with rubber roof system, are installed over entire flat roofing areas 'A', 'C', 'D', 'E' and 'B' (except 2/12 pitch roof portions above classrooms ea. side of Library), at the rate of one per 1,000 sq. ft. of area. Install & flash per EPDM Rubber Mfgr's. recommendations, down to top of exist'g. roofing & below new insulation.

ADD $_____

CHS-3: If additional reroofing work shown at Chesterton High School Roof Area 'G', Dwg. Sheet R-1, CHS is added to Project Scope.

ADD $_____

CHS-4: If Base Bid new adhered membrane roofing shown on Canopy Roof areas 'D' & 'E' on Drawing Sheet R-1 is changed to a new ballasted membrane roofing.

DEDUCT $_____

CHS-5: If additional 24 ga. stainless steel coping cap flashing extension piece shown on detail 2/R-3 around perimeters of both lower roof areas of Library roof portions of Roof Area 'B' is added to Project Scope.

ADD $_____

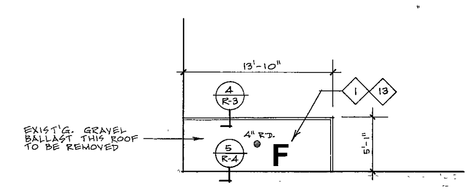

ROOF PLAN - AREA "F"

(CANOPY)

1/16" = 1'-0"

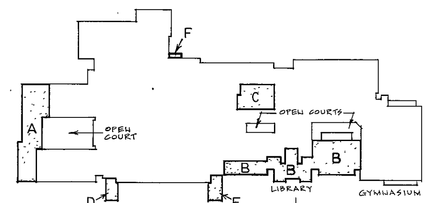

KEY PLAN

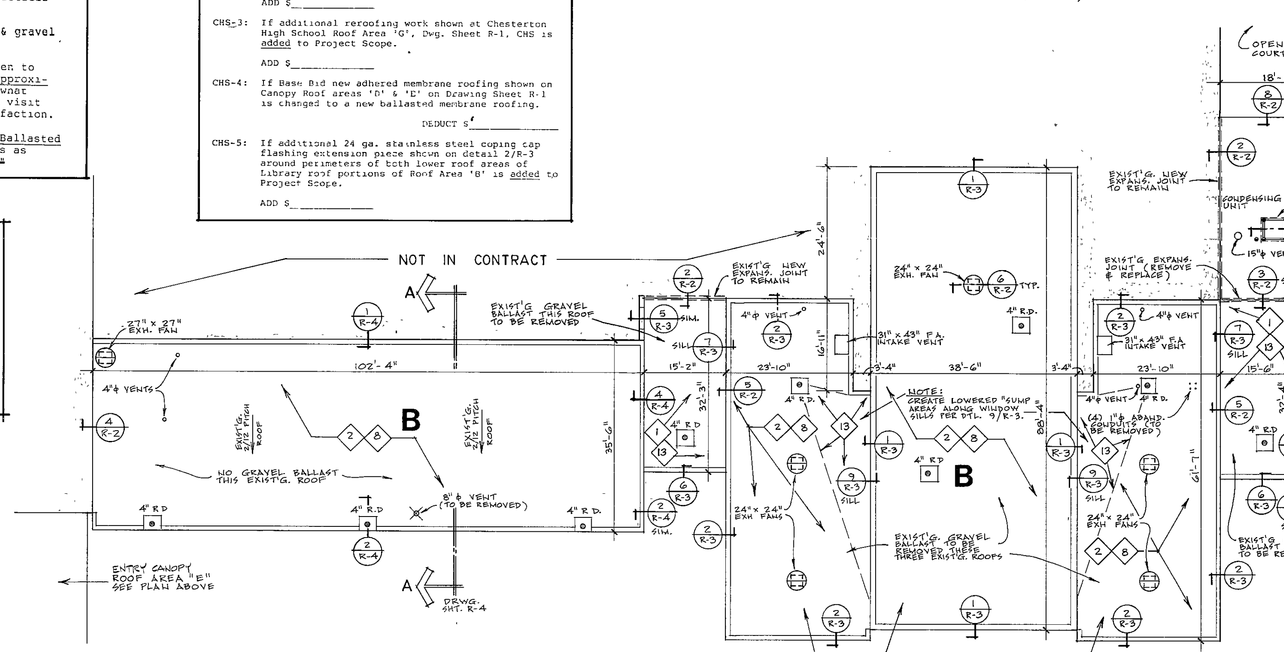

ROOF PLAN - AREA "B"

1/16" = 1'-0"

NORTH

SET #4

REVISIONS	BY

ROOF PLANS

CHESTERTON HIGH SCHOOL PARTIAL REROOFING
DUNELAND SCHOOL CORPORATION CHESTERTON, INDIANA
geometta & kinel architects, inc. chesterton, indiana

DATE	JAN. 26, 1989.
SCALE	AS NOTED
DRAWN	TLA
JOB	8901 A
SHEET	R-1 OF 4 SHEETS

STOCKDRAFTING FORM NO 161-56