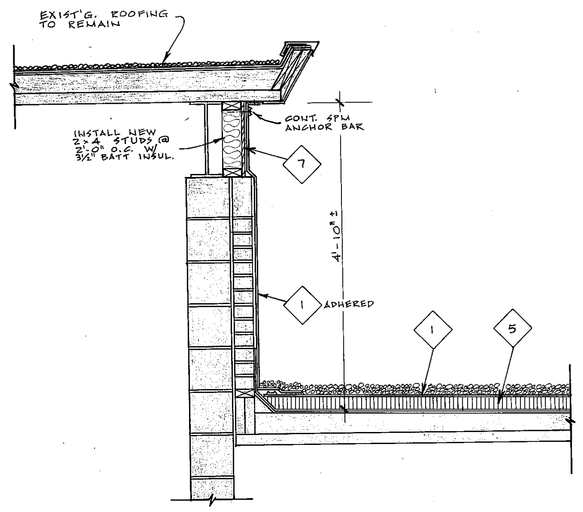

1 / R-3 SECTION 3/4" = 1'-0"

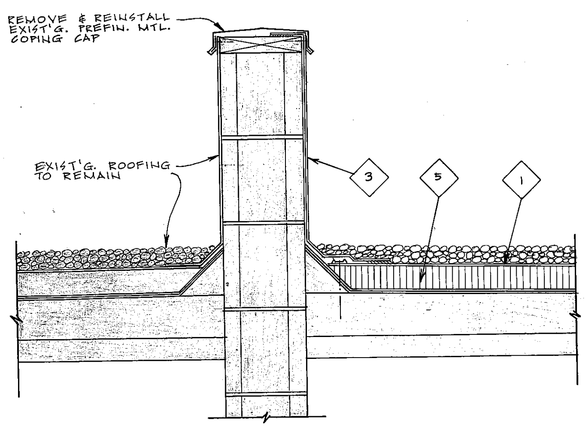

2 / R-3 PARAPET WALL DTL. 1½" = 1'-0"

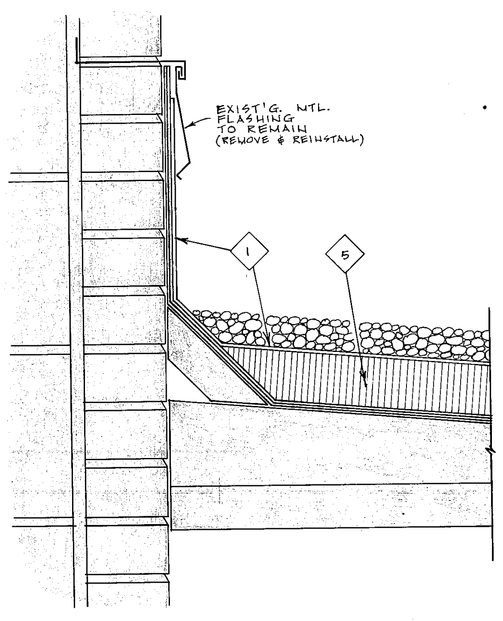

3 / R-3 FLASHING DETAIL 3" = 1'-0"

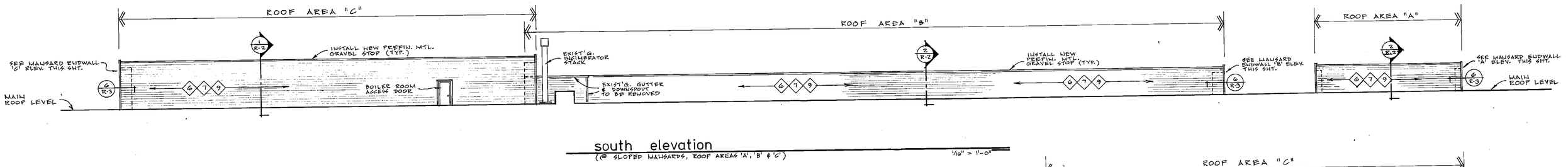

south elevation
(@ SLOPED MANSARDS, ROOF AREAS 'A', 'B' & 'C') 1/16" = 1'-0"

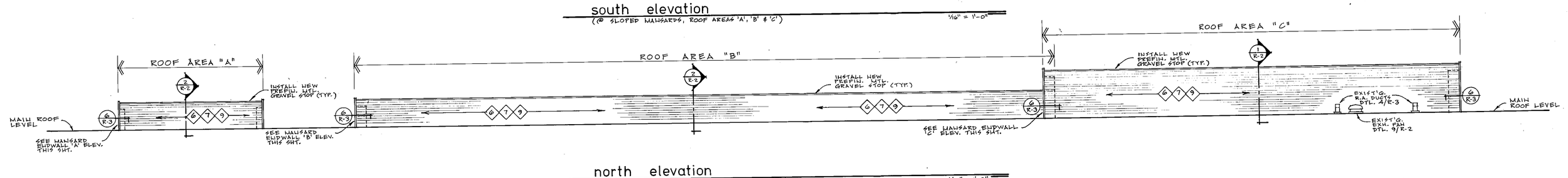

north elevation
(@ SLOPED MANSARDS, ROOF AREAS 'A', 'B' & 'C') 1/16" = 1'-0"

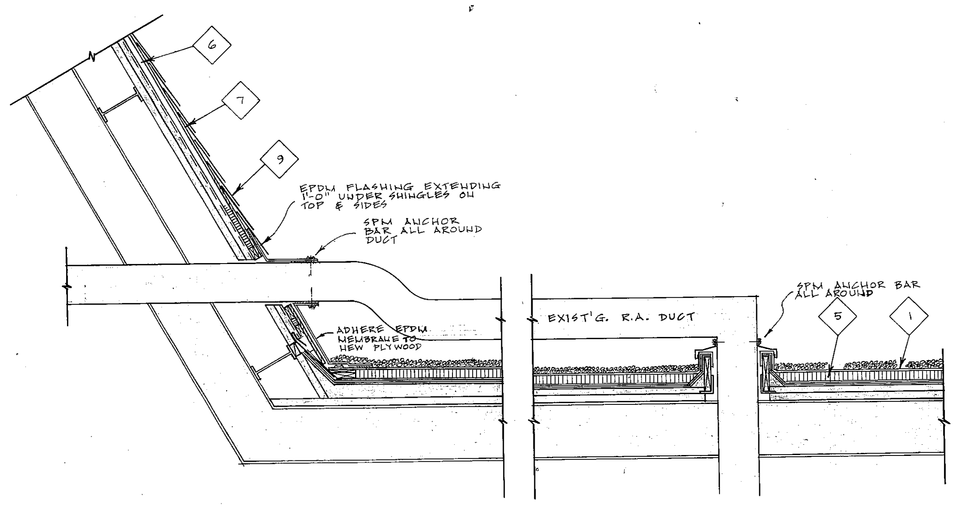

4 / R-3 R.A. DUCT DETAIL 1½" = 1'-0"

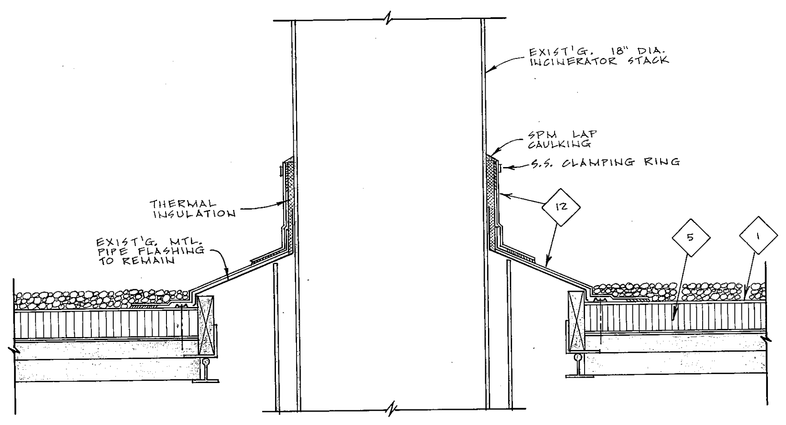

5 / R-3 FLUE DETAIL 1½" = 1'-0"

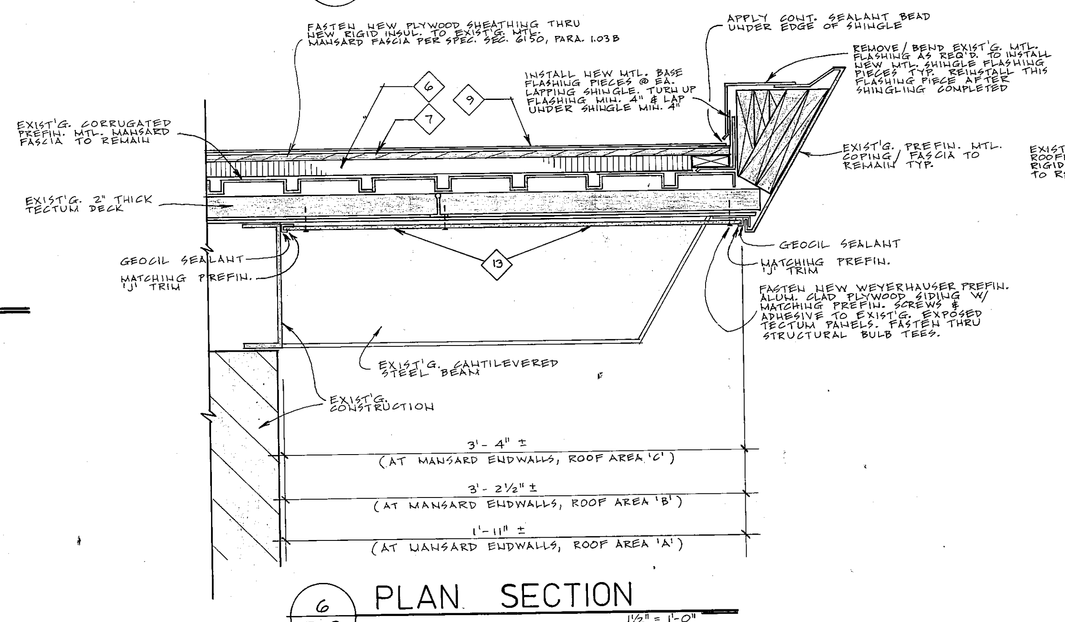

6 / R-3 PLAN SECTION 1½" = 1'-0"

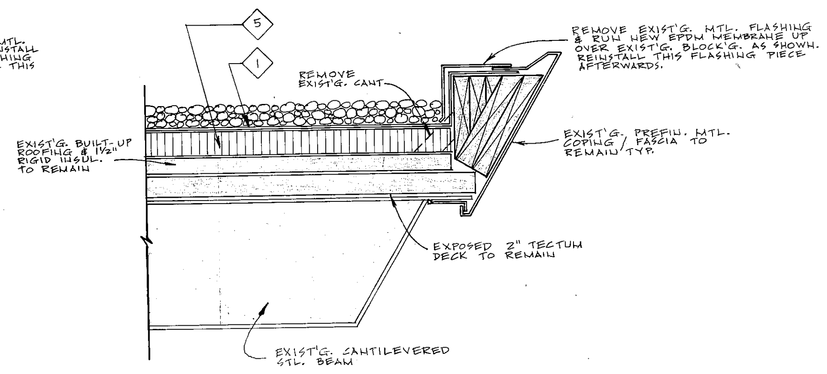

7 / R-3 COPING DETAIL 1½" = 1'-0"
TYPICAL @ EAST & WEST ENDS OF ALL ROOF AREAS ('A', 'B' & 'C') ABOVE MANSARDS

WESTCHESTER MIDDLE SCHOOL ROOF NOTES

DEMOLITION NOTES:

1. Remove existing metal flashing/or drip edge.
2. Raise existing vent & fan curbs if req'd. as shown to maintain min. 8" ht. above new roof.
3. Generally: Power sweep off exist'g. ballast where shown & cut out major blister areas.
4. Existing expansion joint cover to be removed.
5. Existing roofing & insulation to be removed. (WHERE NOTED ONLY)

SPECIFIC NOTES:

1. New single-ply .045" membrane roofing. (Ballasted)
2. New treated blocking, nominal 1" & 2" thickness as detailed. Spike or screw to exist'g. construction for I-90 uplift rating.
3. New flashing strip bonded per Mfgr's. recommendations.
4. New .040" prefinished drip edge or flashing as detailed with concealed clips.
5. New 2.2" faced Isocynurate insulation over ballasted roof area. Adhere or faston insulation in place to hold position until membrane and 10lb./sq.ft. stone ballast is placed. (Ballasted membrane System).
6. New 1½" faced Isocynurate insulation w/ 2 x 4 furring.
7. New ½" C/D exterior plywood sheathing.
8. New "Expando-Flash" EJ expansion joint.
9. New fiberglass shingles. (Spec. Sect. 7500) over 30# felt.
10. New tapered Fescoboard saddle as shown. (Tapers 1½" to ½" in 4').
11. New SPM pre-molded pipe flashing.
12. New field-fabricated pipe flashing.
13. New Weyerhauser Panel 15 "Shasta White" prefinished aluminum-faced 5/16" thick exterior plywood siding. (Use full 4' x 8' sheets, and matching 'J' & 'T' molding and matching prefinished SCREW FASTENERS.)

GENERAL NOTES:

1. Also see Roofing Spec. Section 7550 for typical details on pipe flashing, pitch pockets, parapets, roof vents, etc. (These details may vary somewhat per Mfgr.).
2. All details shown on Sheets R-2 & R-3 (except sheet metal coping & drip edge) will vary somewhat per Mfgr's. standard details.
3. "Existing Construction" conditions shown on Drawings are given to assist Bidders in preparing their Proposal. These details approximate exist'g. configurations & dimensions & will vary somewhat in the field. It remains the Contractor's responsibility to visit the project and ascertain exist'g. conditions to his own satisfaction.

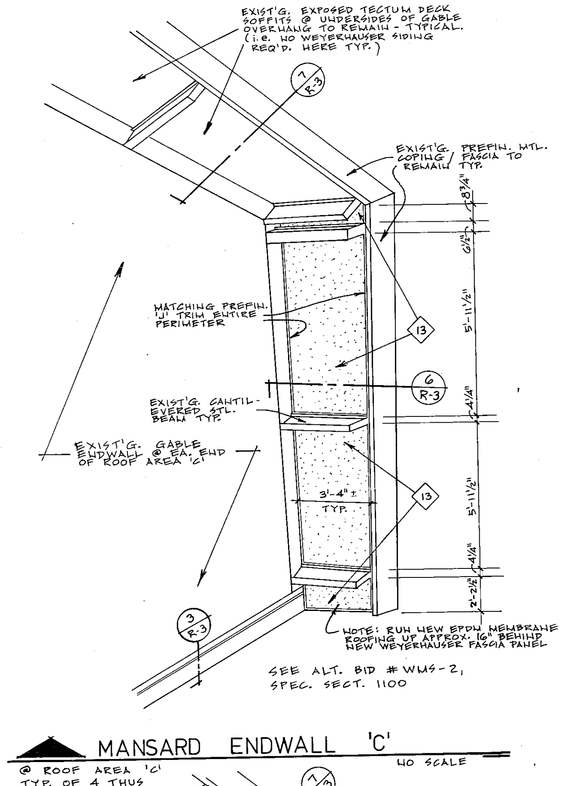

MANSARD ENDWALL 'C'
@ ROOF AREA 'C' TYP. OF 4 THUS — 40 SCALE

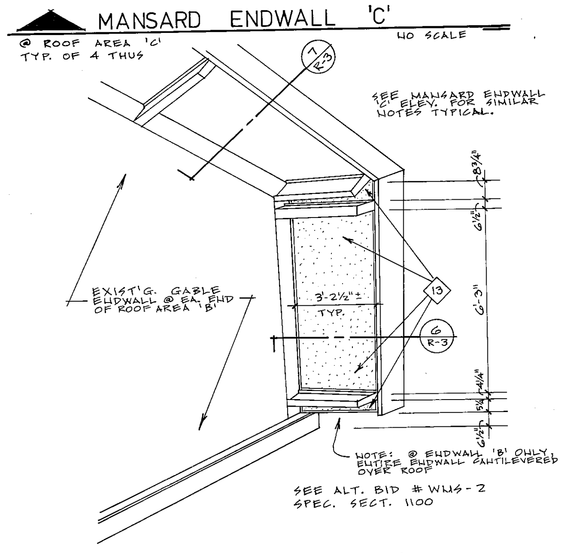

MANSARD ENDWALL 'B'
@ ROOF AREA 'B' TYP. OF 2 THUS — 40 SCALE

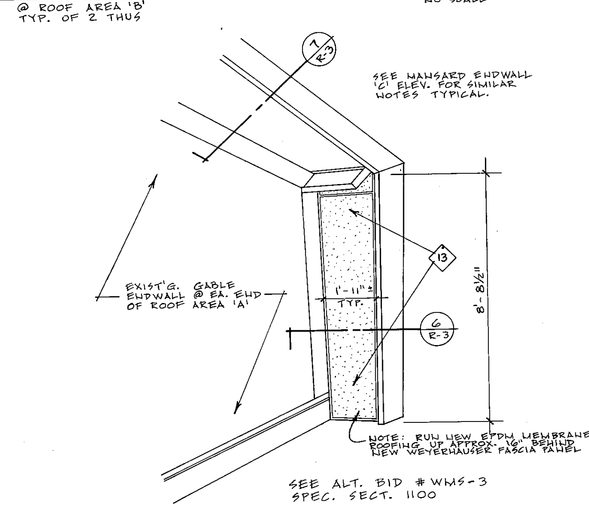

MANSARD ENDWALL 'A'
@ ROOF AREA 'A' TYP. OF 4 THUS — 40 SCALE

REVISIONS	BY

ROBERT M. GEROMETTA REGISTERED No. 2626 STATE OF INDIANA ARCHITECT

DAVID J. KINEL REGISTERED No. 3147 STATE OF INDIANA ARCHITECT

ROOF DETAILS

WESTCHESTER MIDDLE SCHOOL PARTIAL REROOFING
DUNELAND SCHOOL CORPORATION CHESTERTON, INDIANA

gerometta & kinel architects, inc. chesterton, indiana

DATE	3/28/88.
SCALE	AS NOTED
DRAWN	TLA
JOB	8801 B
SHEET	R-3
OF	3 SHEETS

WMS

STOCKDRAFTING FORM NO. 101-94