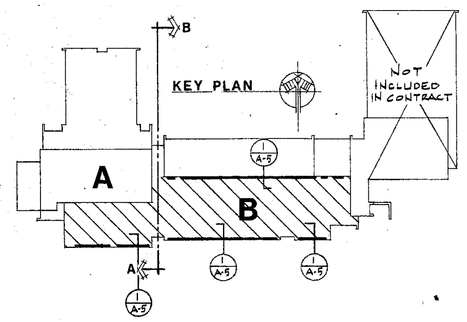


NOTE:
ALL NEW WOOD BLOCKING @ HEADS, JAMBS & SILLS TO BE TREATED LUMBER.

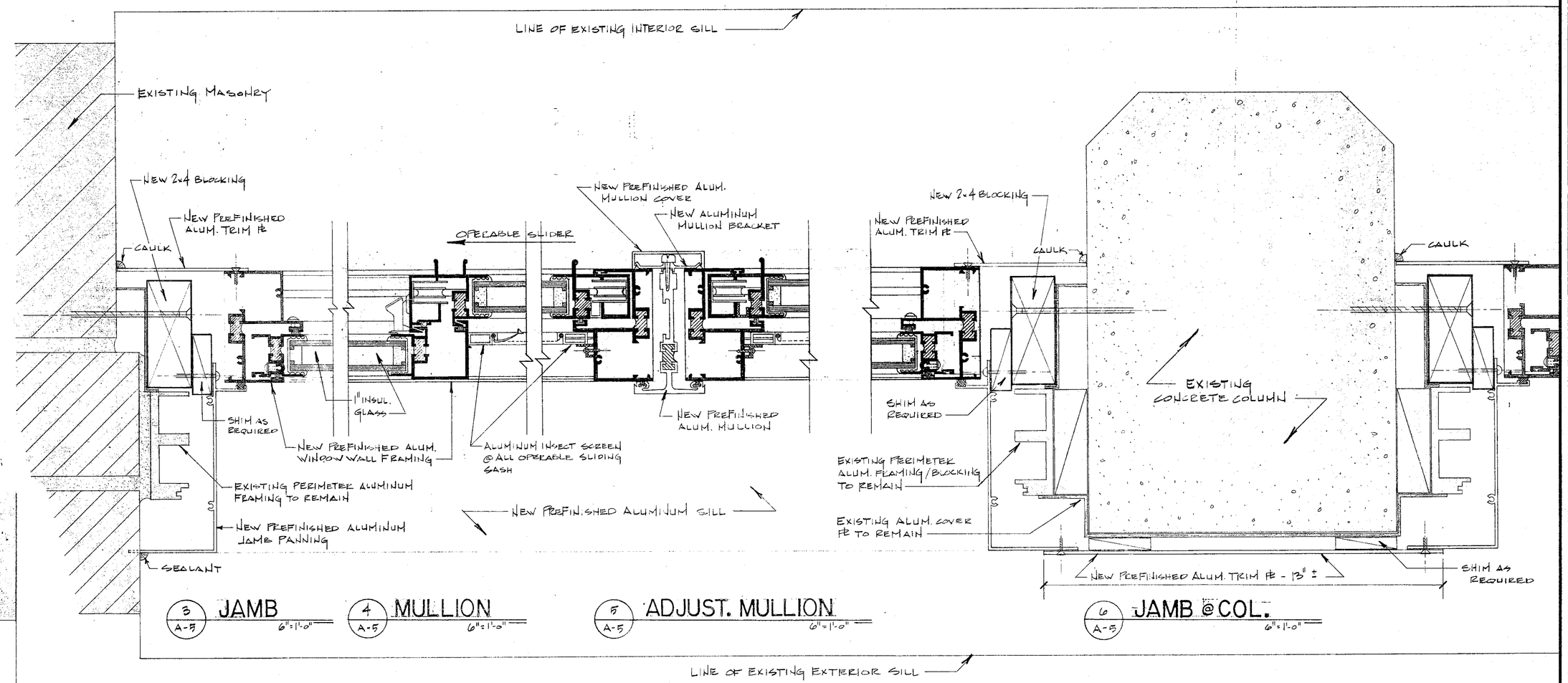


3/A-5 JAMB 6"=1'-0"

4/A-5 MULLION 6"=1'-0"

5/A-5 ADJUST. MULLION 6"=1'-0"

6/A-5 JAMB @ COL. 6"=1'-0"

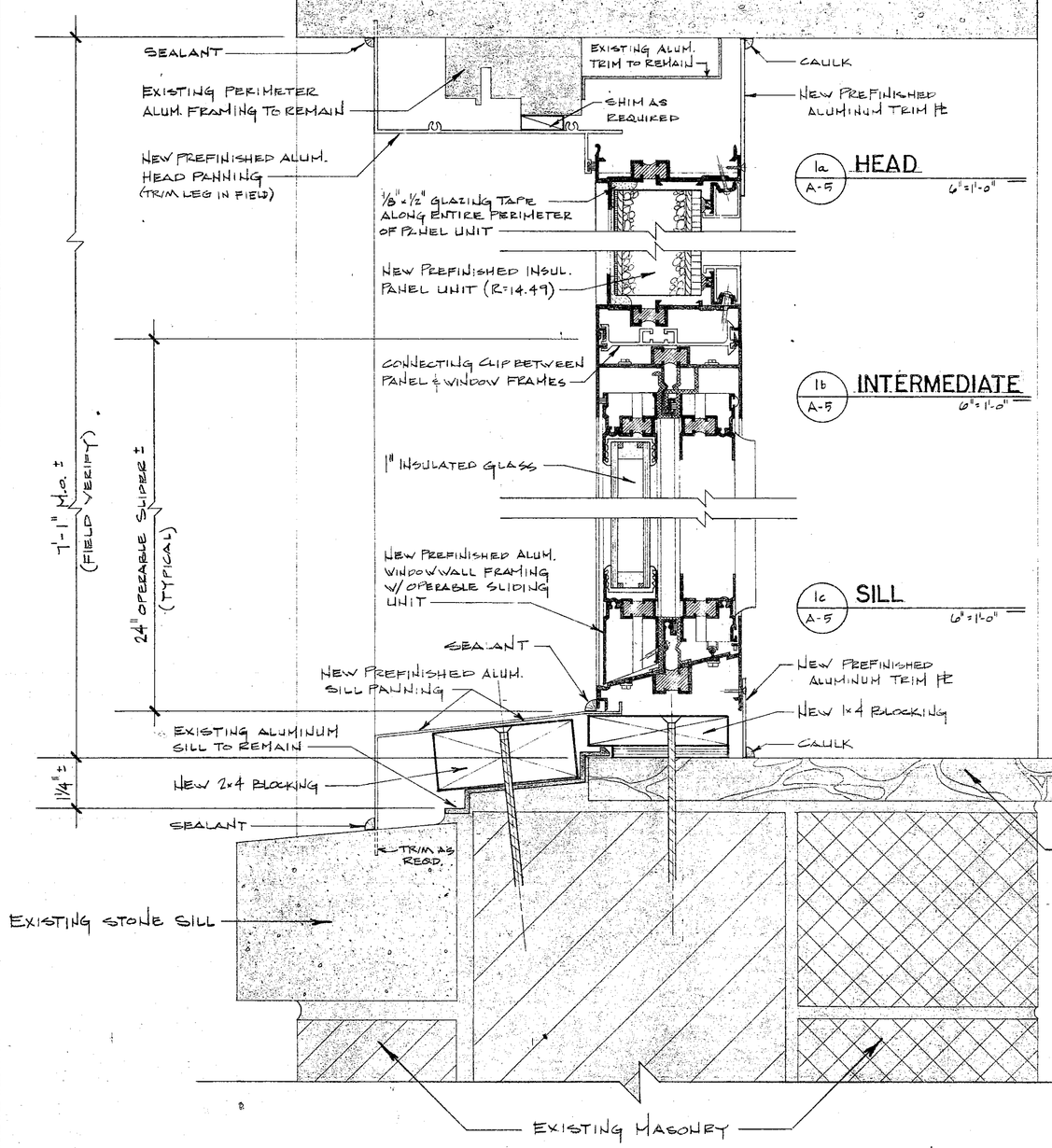


1a/A-5 HEAD 6"=1'-0"

1b/A-5 INTERMEDIATE 6"=1'-0"

1c/A-5 SILL 6"=1'-0"

1/A-5 VERTICAL SECTION 6"=1'-0"

NOTE:
ALL NEW WOOD BLOCKING @ HEADS, JAMBS & SILLS TO BE TREATED LUMBER.

| REVISIONS | B |
|---|---|
| | |
| | |
| | |
| | |
| | |
| | |

WINDOWWALL DETAILS

YOST SCHOOL WINDOWWALL REPLACEMENT
DUNELAND SCHOOL CORPORATION chesterton, indiana

| | |
|---|---|
| DATE | 2-9-87 |
| SCALE | 6"=1'-0" |
| DRAWN | SPV |
| JOB | 8708A |
| SHEET | A-5 |
| OF | 5 SHEETS |

8/8/1-25

STOCKDRAFTING FORM NO. 101-58