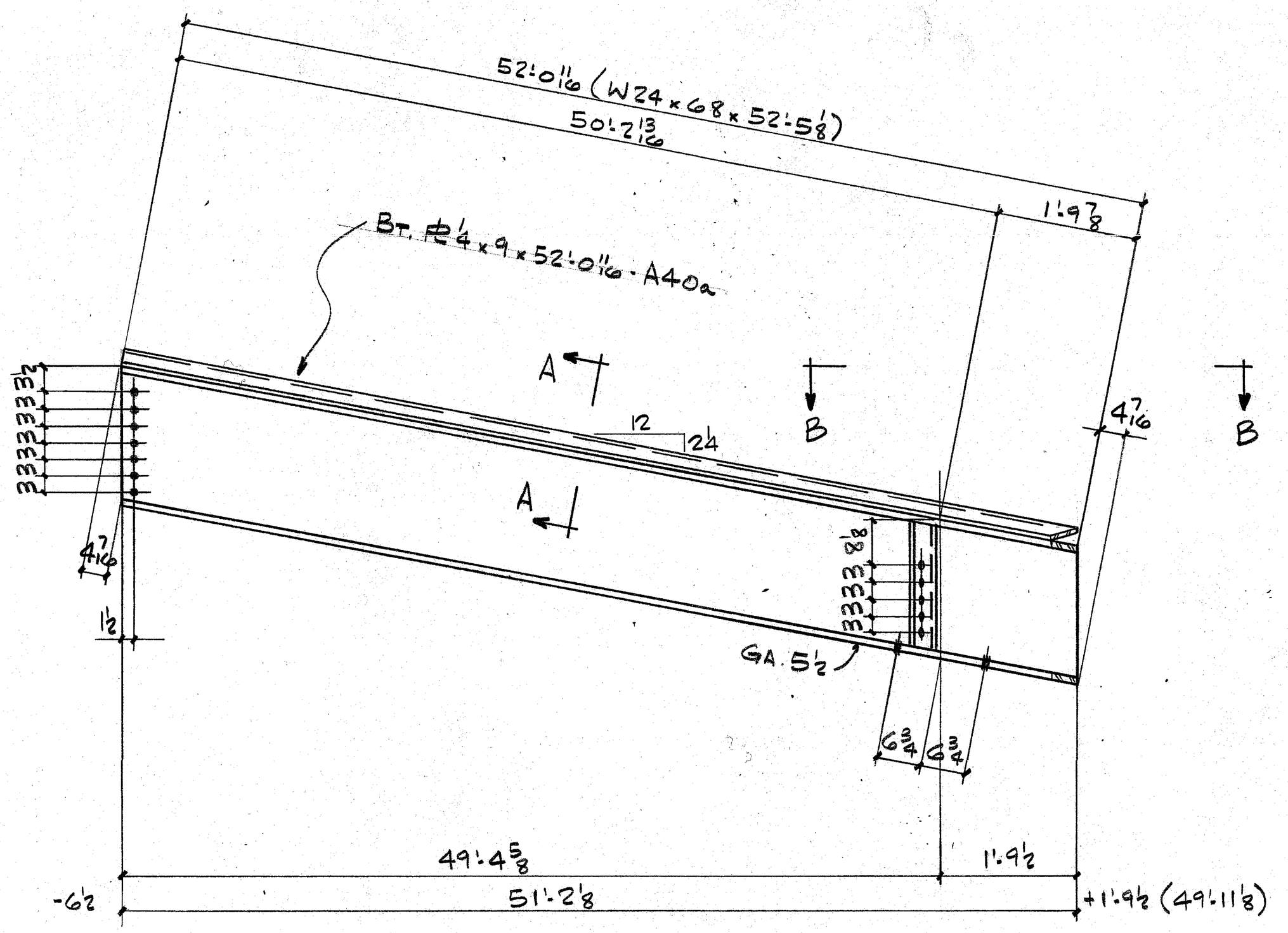

2 - BEAMS - A40 (AS SHN.)
2 - DO - B40 (OPP. HD.)

28 - 3/4 Φ x 2 HS W/W

16 - 3/4 Φ x 2 1/4 HS W/W

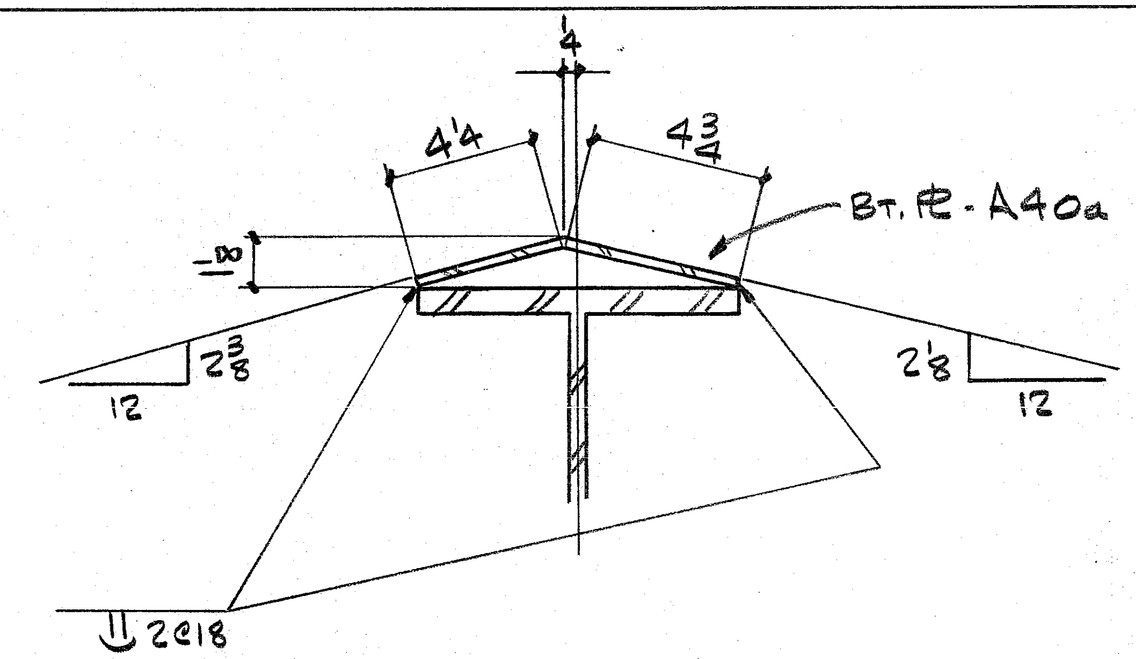

SECTION A-A

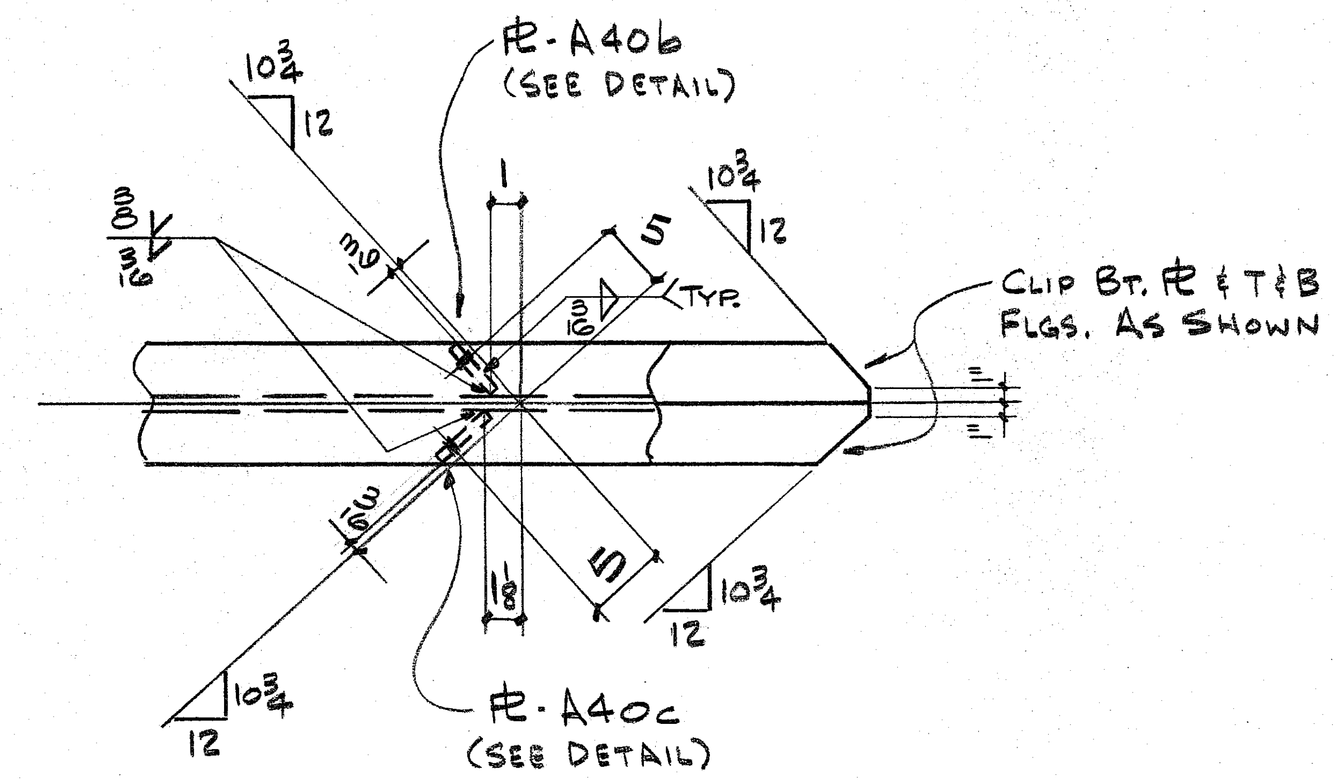

VIEW B-B

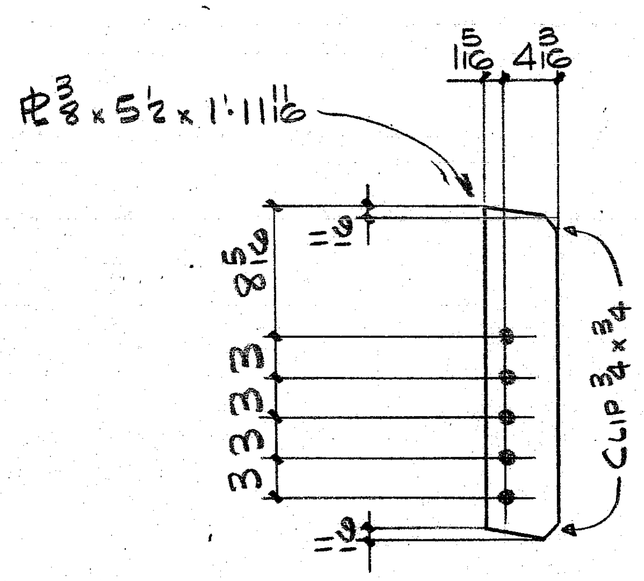

DETAIL OF PL - A40b

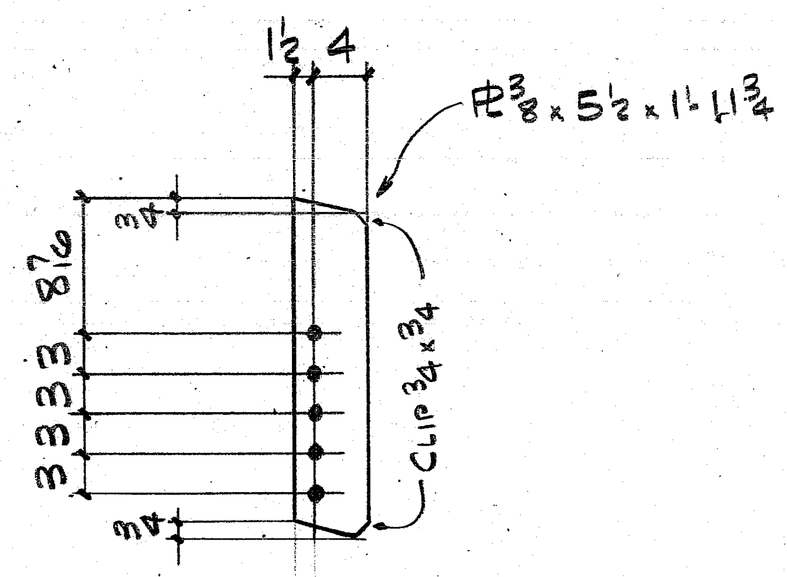

DETAIL OF PL - A40c

APPROVED
EVERETT I. BROWN CO.
BY
DATE MAR 21
APPROVED DRAWINGS FOR FIELD USE
DATE MAR 9 1983

ISSUE	#BP	FOR	DATE	BY	REV	DATE	DESCRIPTION	MADE BY
3	4	FIELD	3/9/83	AA				
1	3	APP	12/10/82	AA				

INTERSTATE WELDING & FABRICATION, INC.
1670 DAVIS AVENUE • TERRE HAUTE, INDIANA 47802

HOLES 13/16 Φ
PAINT 1-CT. RED MAB 60802
CLEAN'G.
REF. DWG'S.

JACKSON ELEMENTARY SCHOOL

DWN. BY WK
CHK'D. BY
JOB # 6300
SHT. # 40