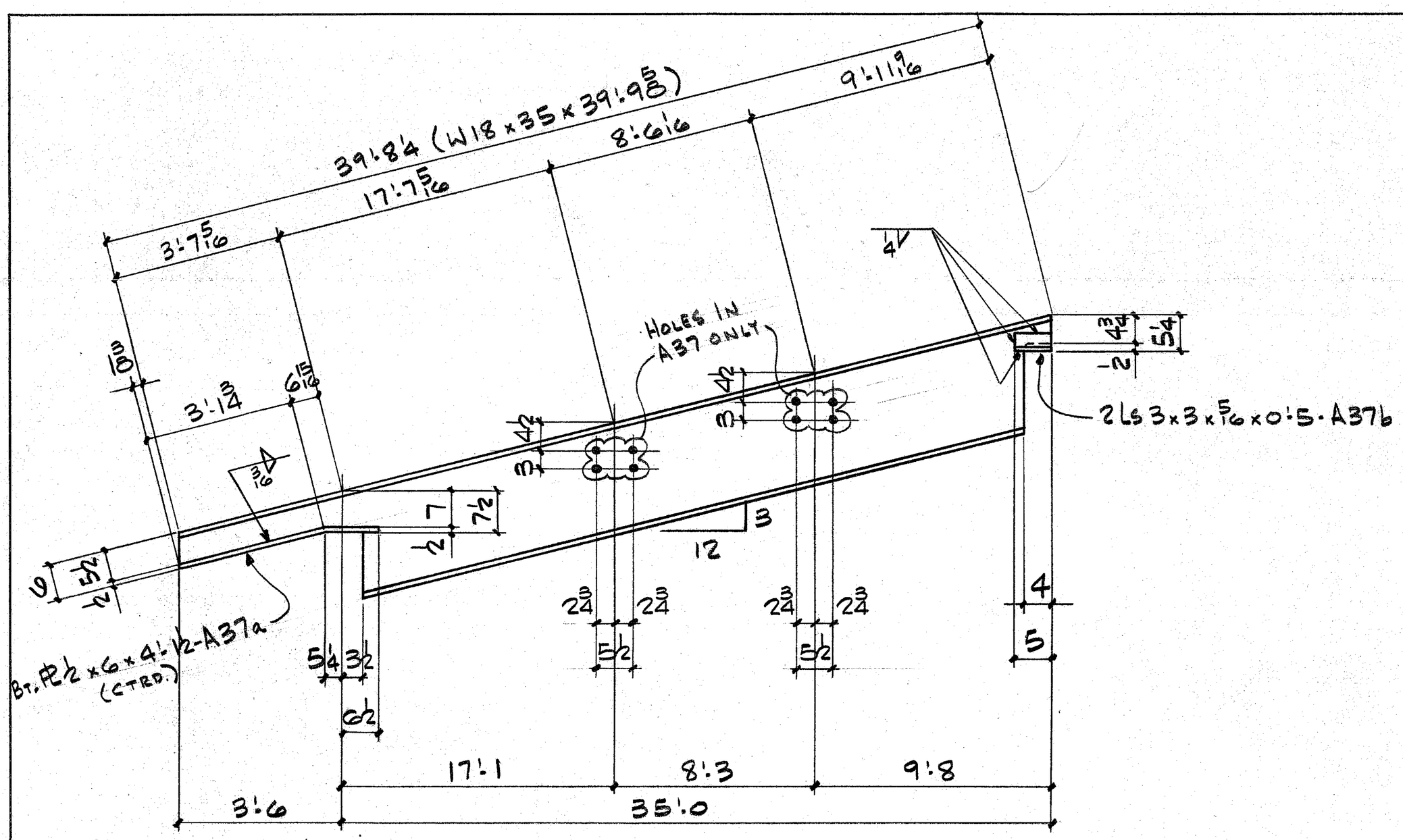

2 - BEAMS - A37
2 - Do - B37

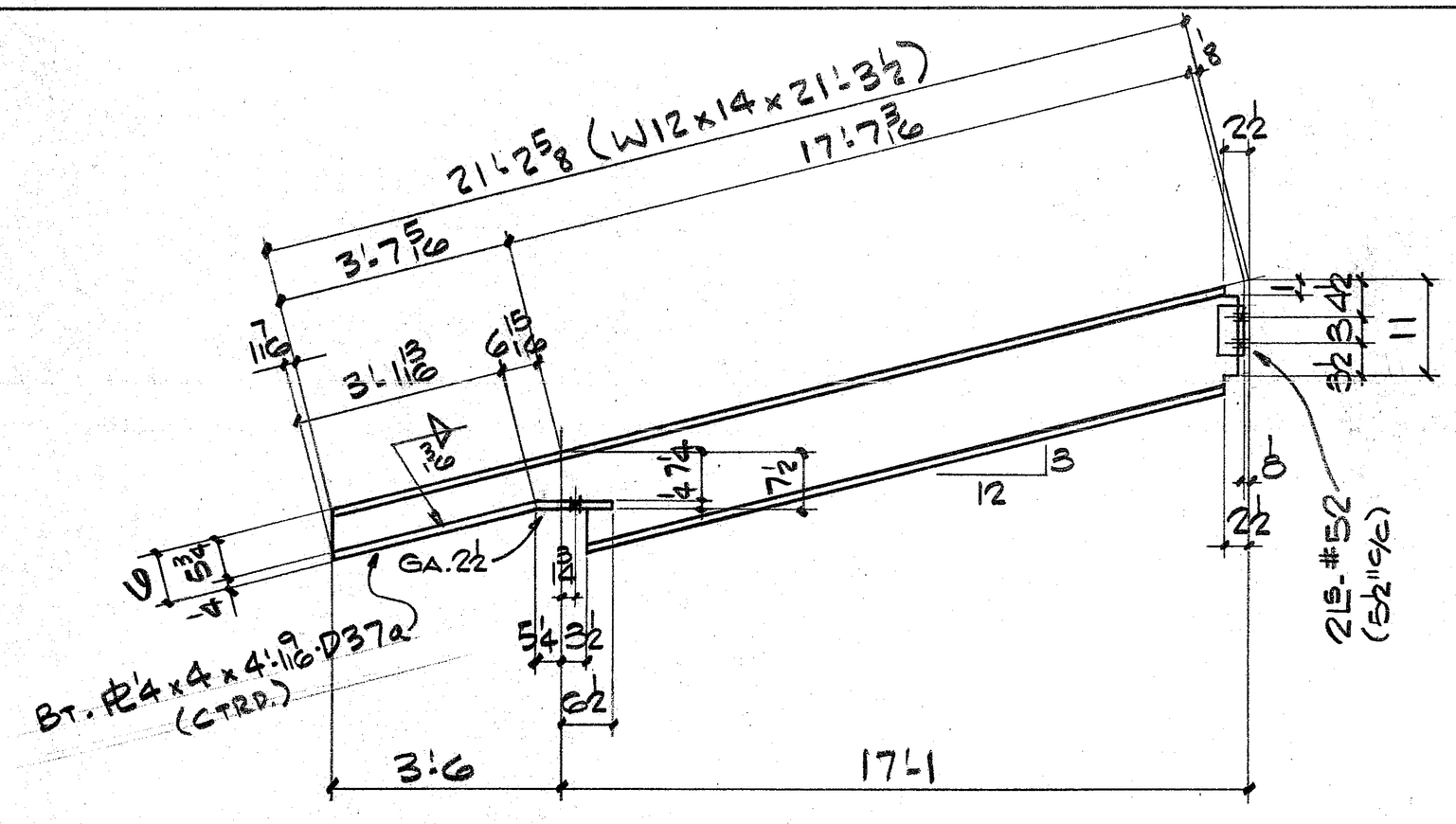

ONE - BEAM - D37

2-¾Φ x 2 HS w/w

4-¾Φ x 1¾ HS w/w

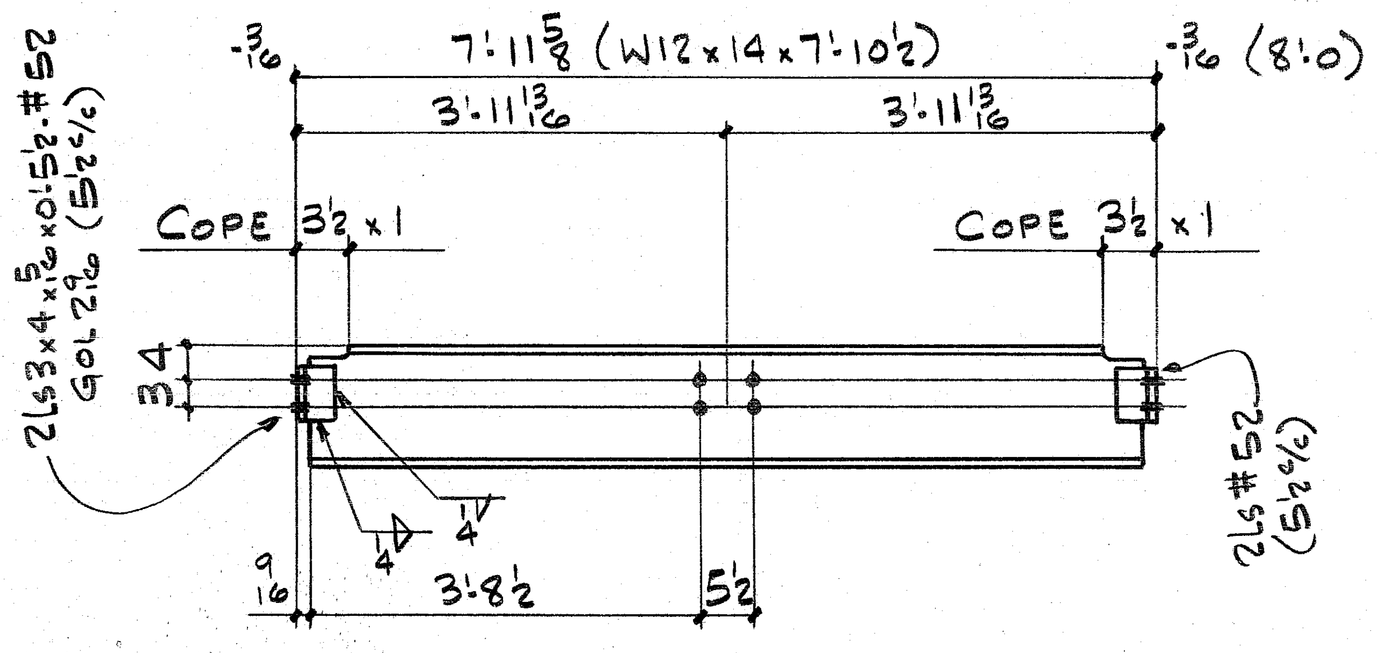

2 - BEAMS - C37

8-¾Φ x 2 HS w/w

8-¾Φ x 2 HS w/w

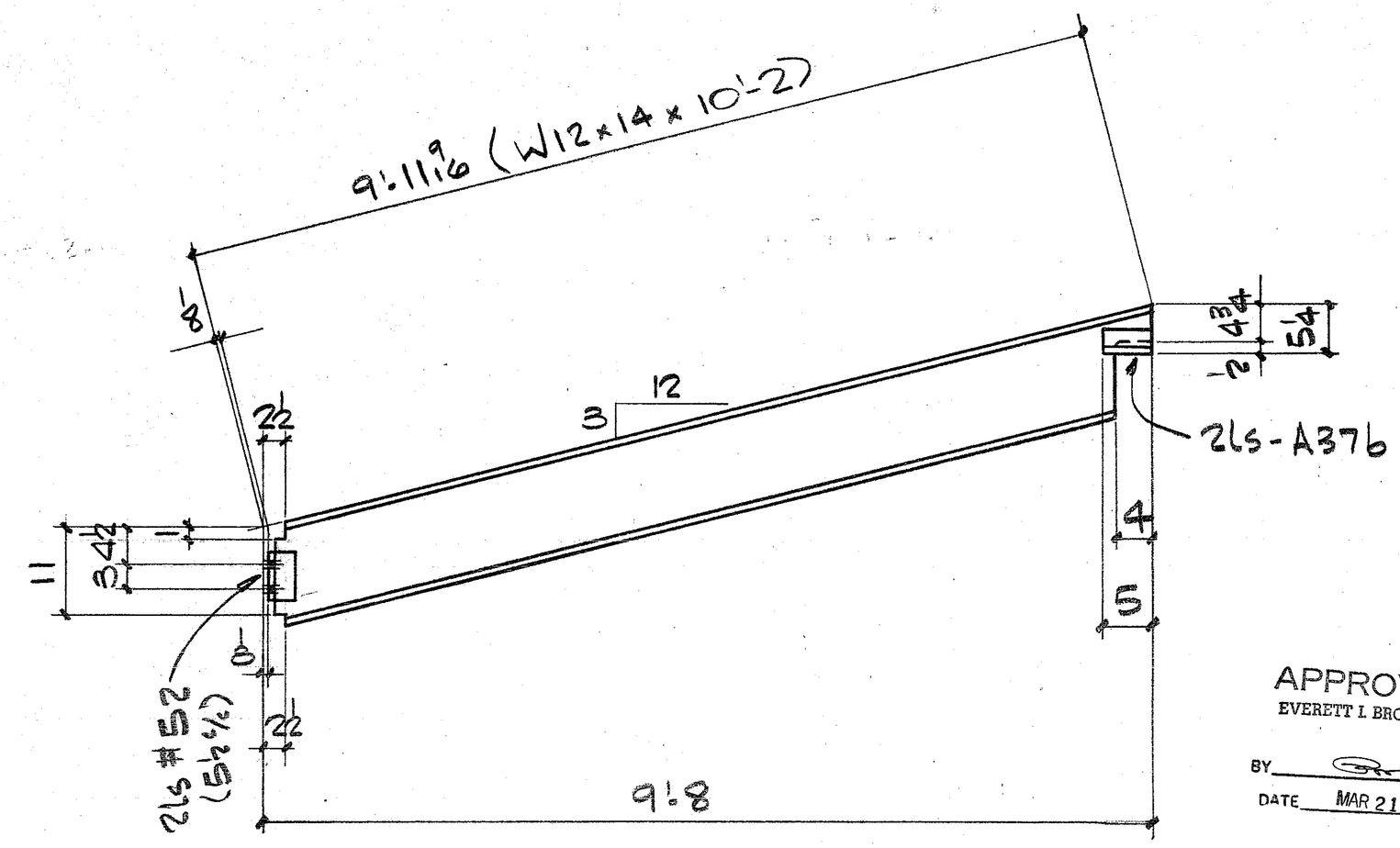

ONE - BEAM - F37

4-¾Φ x 1¾ HS w/w

APPROVED
EVERETT I. BROWN CO.
BY
DATE MAR 21

APPROVED DRAWINGS FOR FIELD USE
DATE

83-D-37

ISSUE	#BP	FOR	DATE	BY
8	4	FIELD	8/4/83	AM
1	3	APP	12/10/82	AF

REV.	DATE	DESCRIPTION	MADE BY

INTERSTATE WELDING & FABRICATION, INC.
1670 DAVIS AVENUE • TERRE HAUTE, INDIANA 47802

HOLES 13/16 Φ
PAINT 1-CT. RED MAB 60803
CLEAN'G.
REF. DWG'S.

JACKSON ELEMENTARY SCHOOL

DWN. BY WK
CHK'D. BY
JOB # 6300
SHT. # 37