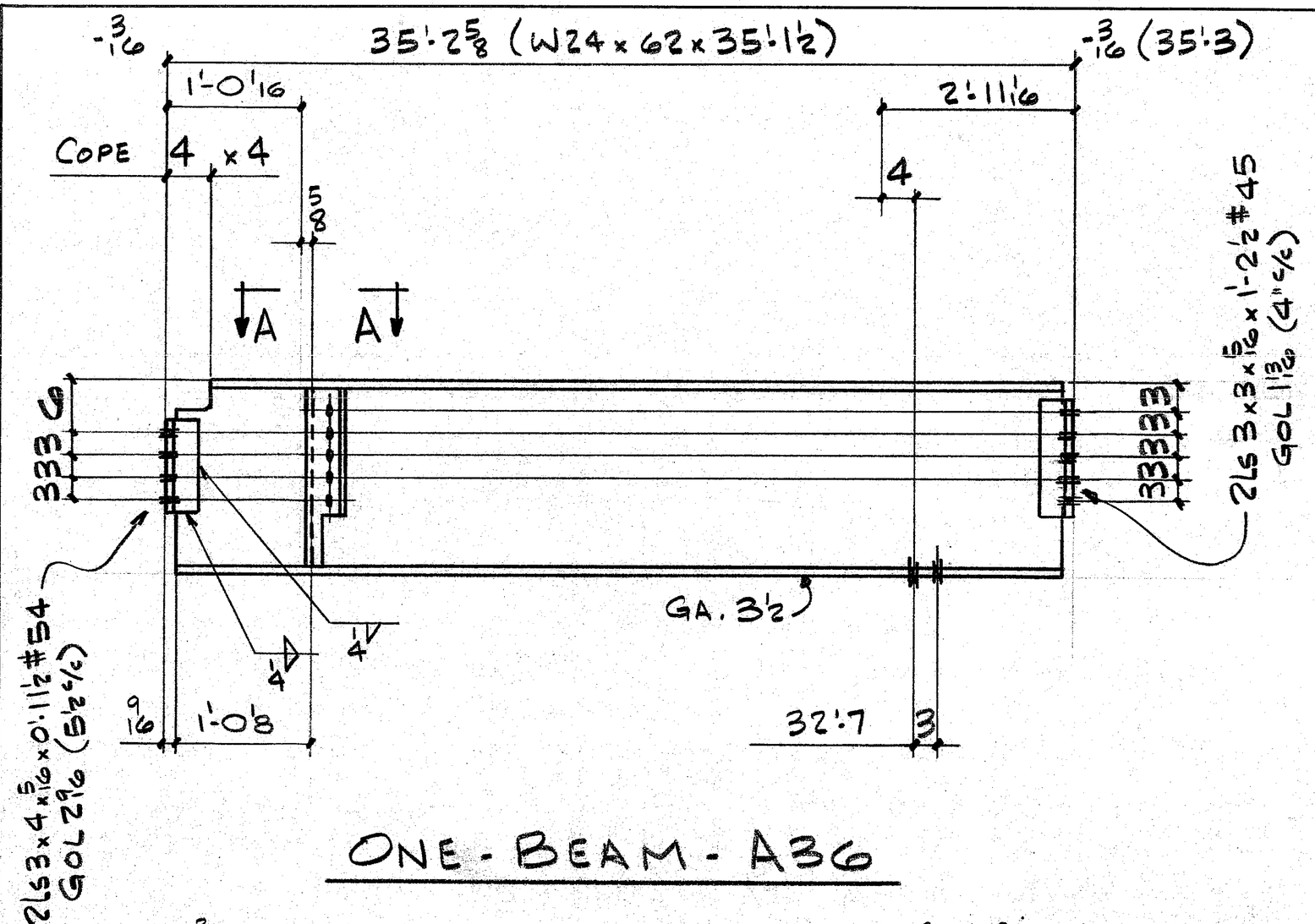

ONE - BEAM - A36

8-3/4Φ x 2 HSW/W

10-3/4Φ x 1 3/4 HSW/W

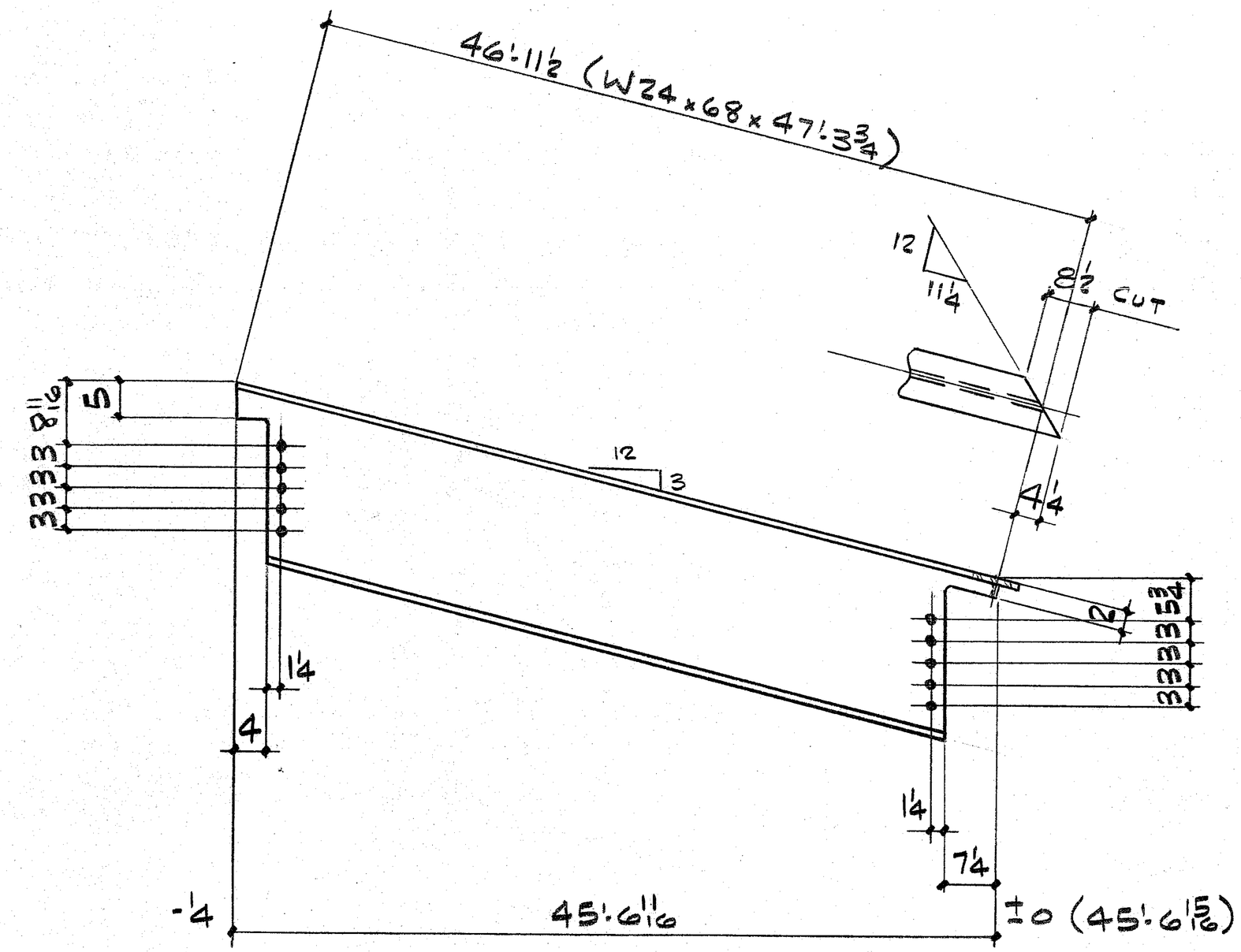

ONE - BEAM - B36 (AS SHN.)
ONE - DO - C36 (OPP. HD.)

10-3/4Φ x 2 HSW/W

10-3/4Φ x 2 HSW/W

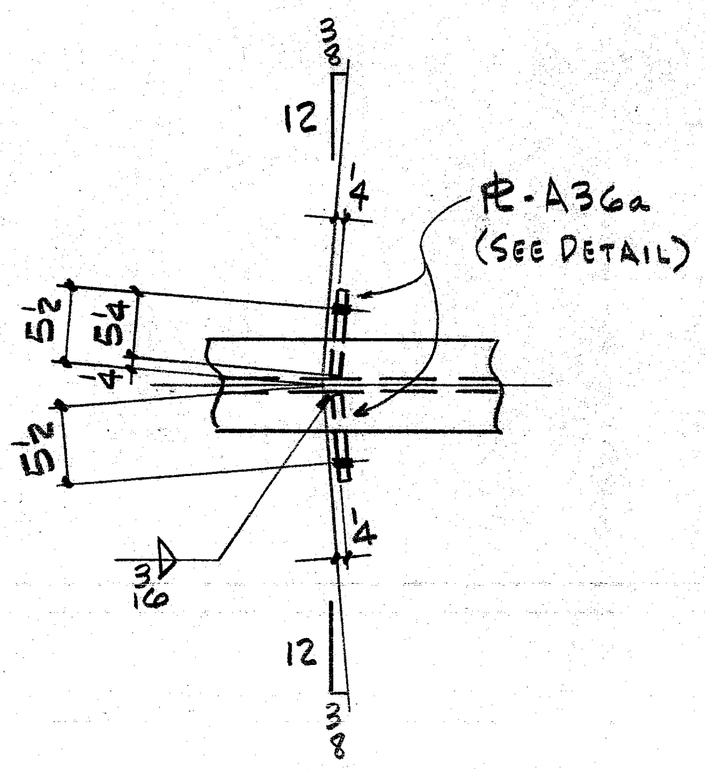

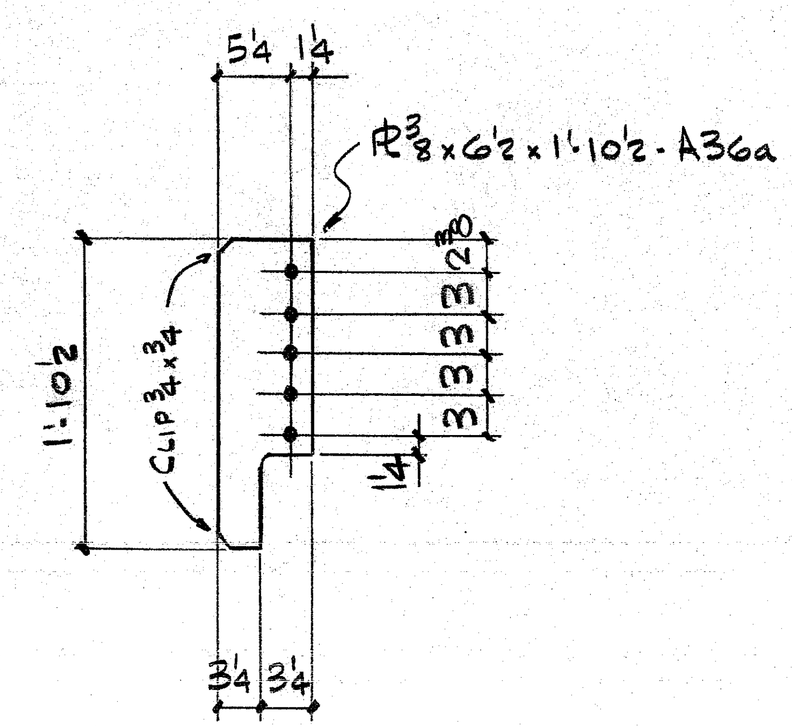

DETAIL OF PL - A36a

APPROVED
EVERETT I. BROWN CO.
BY
DATE MAR 21

APPROVED DRAWINGS
FOR FIELD USE
DATE MAR 9 1983

ISSUE	#BP	FOR	DATE	BY
3	4	FIELD	3/9/83	AA
1	3	APP	12/10/82	AA

REV.	DATE	DESCRIPTION	MADE BY

INTERSTATE WELDING & FABRICATION, INC.
1670 DAVIS AVENUE • TERRE HAUTE, INDIANA 47802

HOLES 13/16Φ
PAINT 1 CT. RED MAB 60802
CLEAN'G.
REF. DWG'S.

JACKSON ELEMENTARY SCHOOL

DWN. BY WK
CHK'D. BY B.
JOB # 6300
SHT. # 36