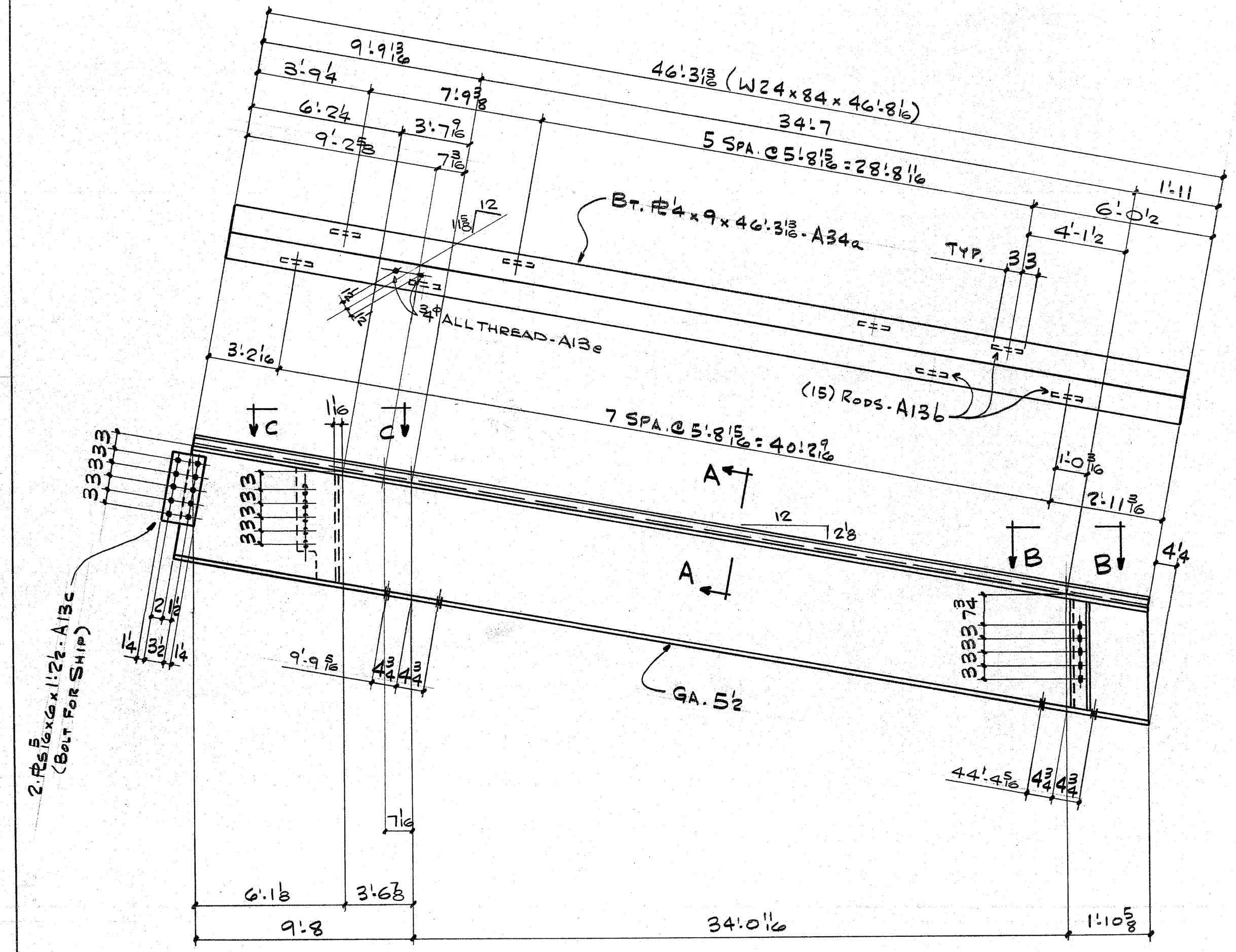

ONE - BEAM - A34

4 - 3/4ϕ x 2 1/2 HS W/W
10 - 3/4ϕ x 2 1/4 HS W/W

4 - 3/4ϕ x 2 1/2 HS W/W

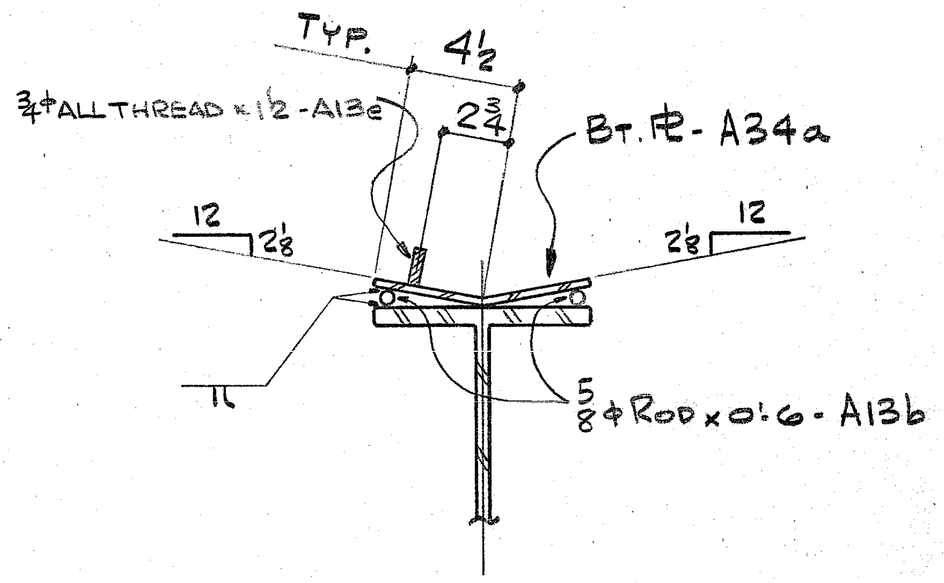

SECTION A-A

SHOP NOTE:
BT. PL - A34a NOT SHOWN FOR CLARITY

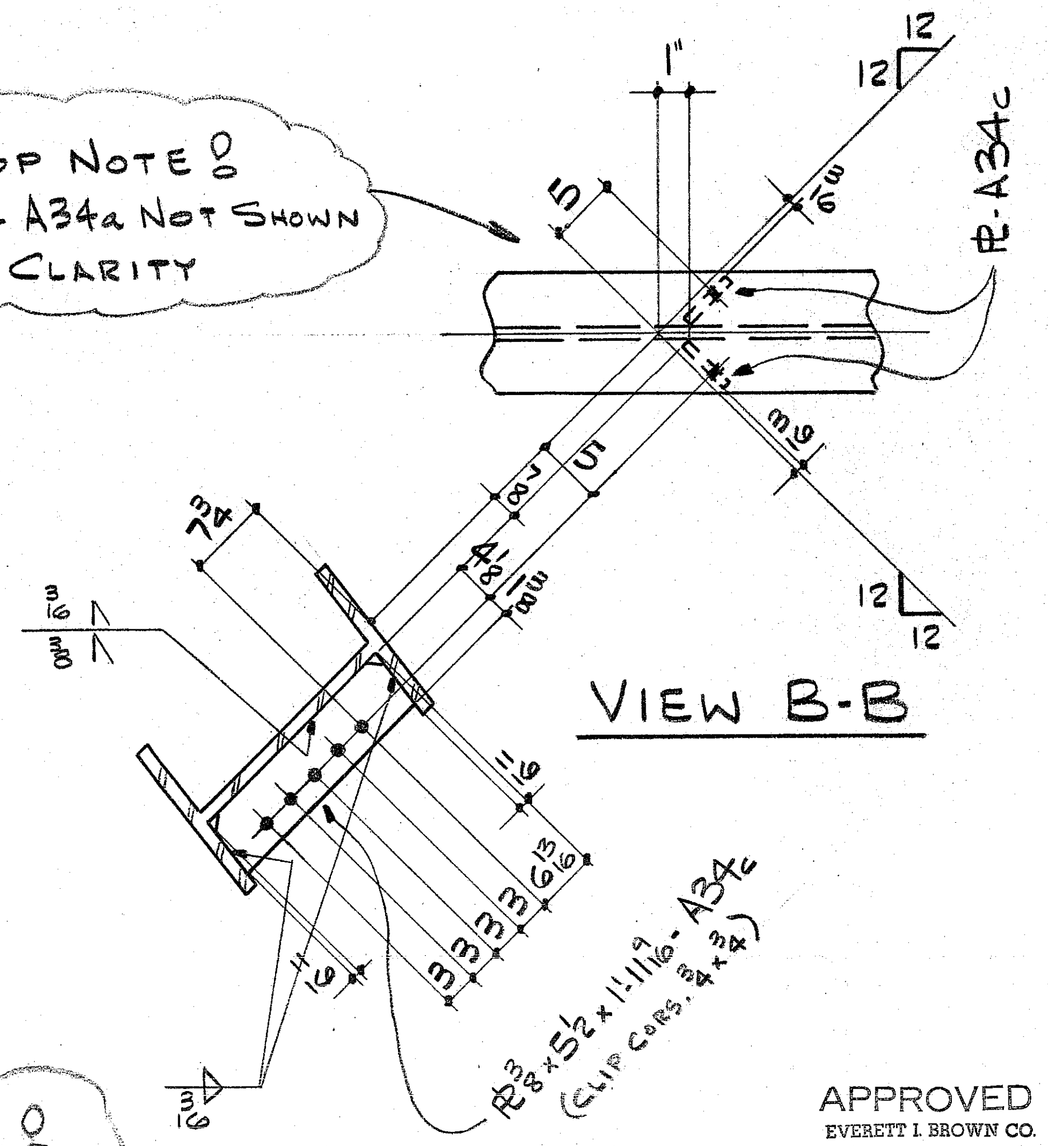

VIEW B-B

SHOP NOTE:
WORK THIS SHEET WITH SHEET 34B

APPROVED
EVERETT I. BROWN CO.
BY
DATE MAR 21
APPROVED DRAWINGS FOR FIELD USE
DATE MAR 9 1983

ISSUE	#BP	FOR	DATE	BY
2	4	FIELD	3/9/83	AL

REV.	DATE	DESCRIPTION	MADE BY

INTERSTATE WELDING & FABRICATION, INC.
1670 DAVIS AVENUE • TERRE HAUTE, INDIANA 47802

HOLES 13/16ϕ
PAINT 1-ST. RED MAB-600802
CLEAN'G.
REF. DWG'S.

JACKSON ELEMENTARY SCHOOL

DWN. BY WK
CHK'D. BY
JOB # 6300
SHT. # 34A