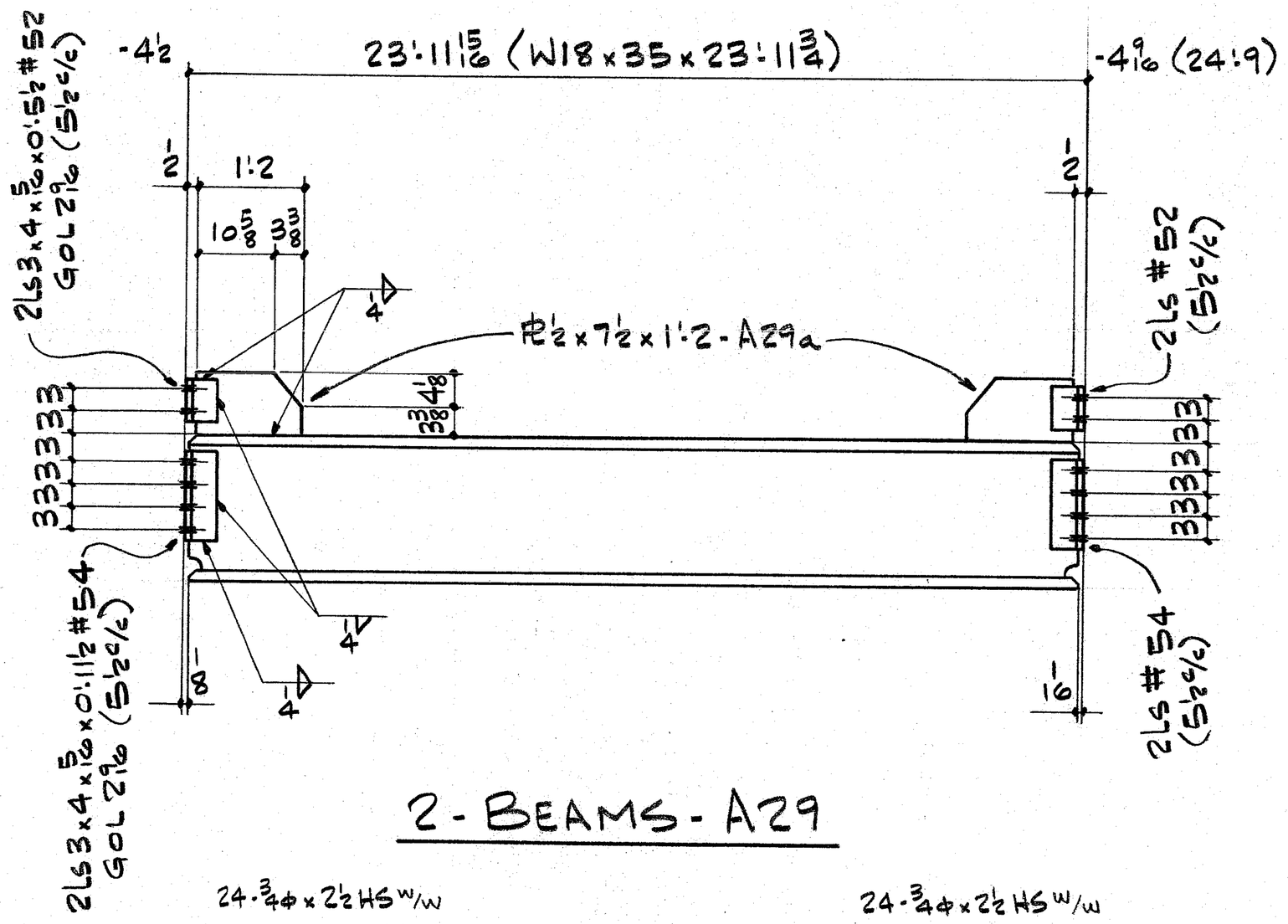

2-BEAMS-A29

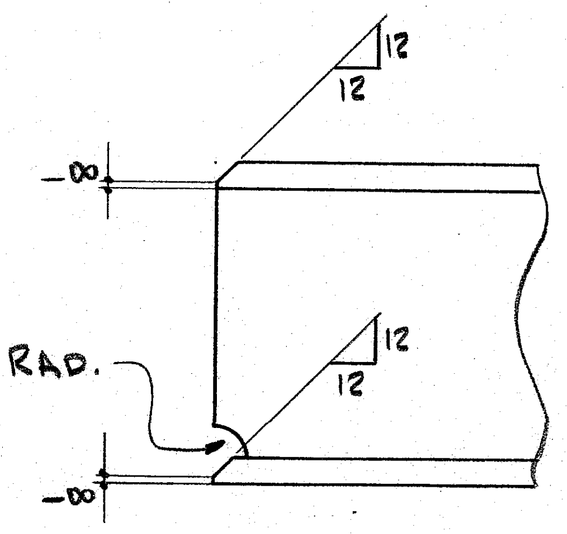

TYP. CUT DETAIL

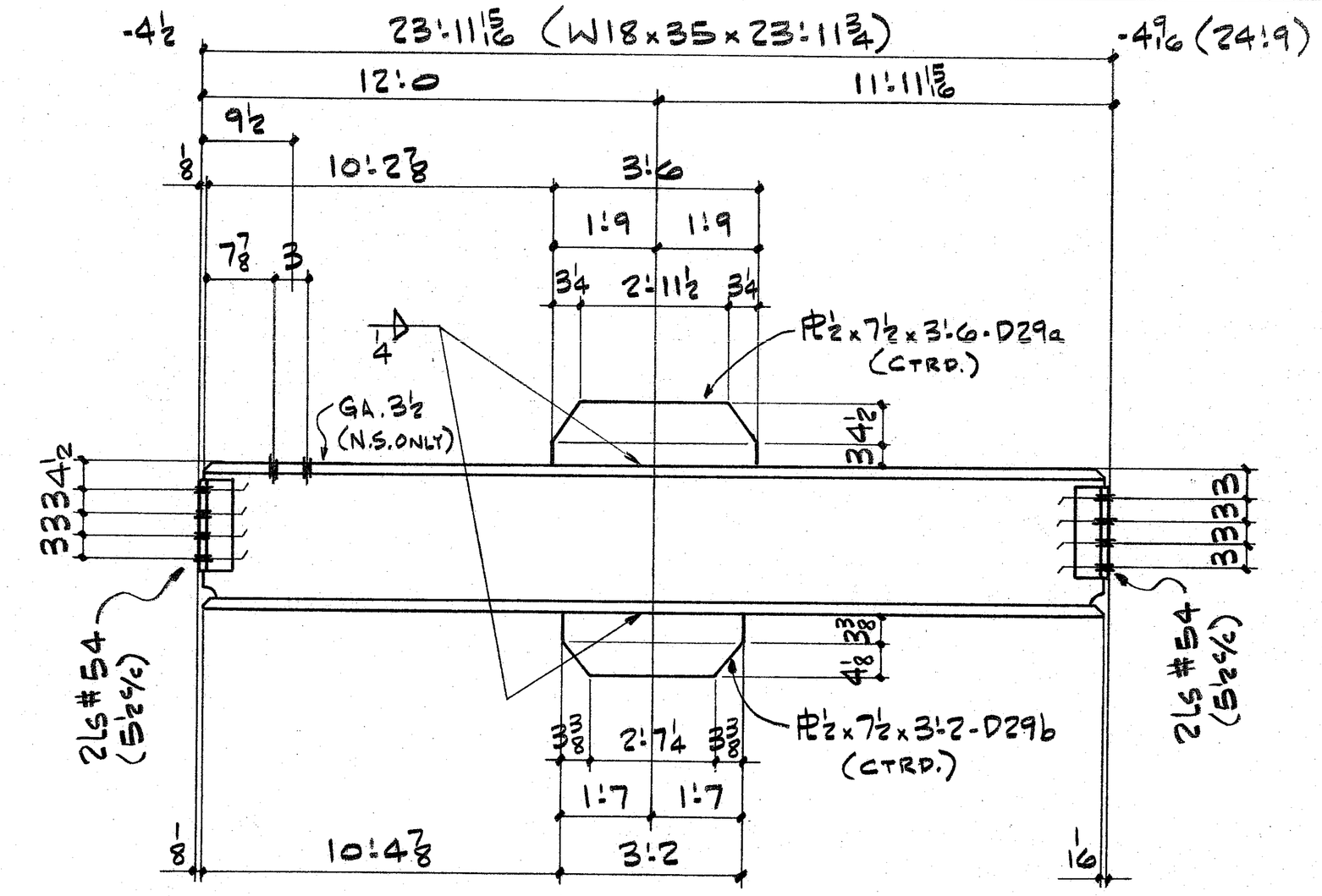

ONE-BEAM-D29 (AS SHN.)
ONE- DO -F29 (OPP. HD.)

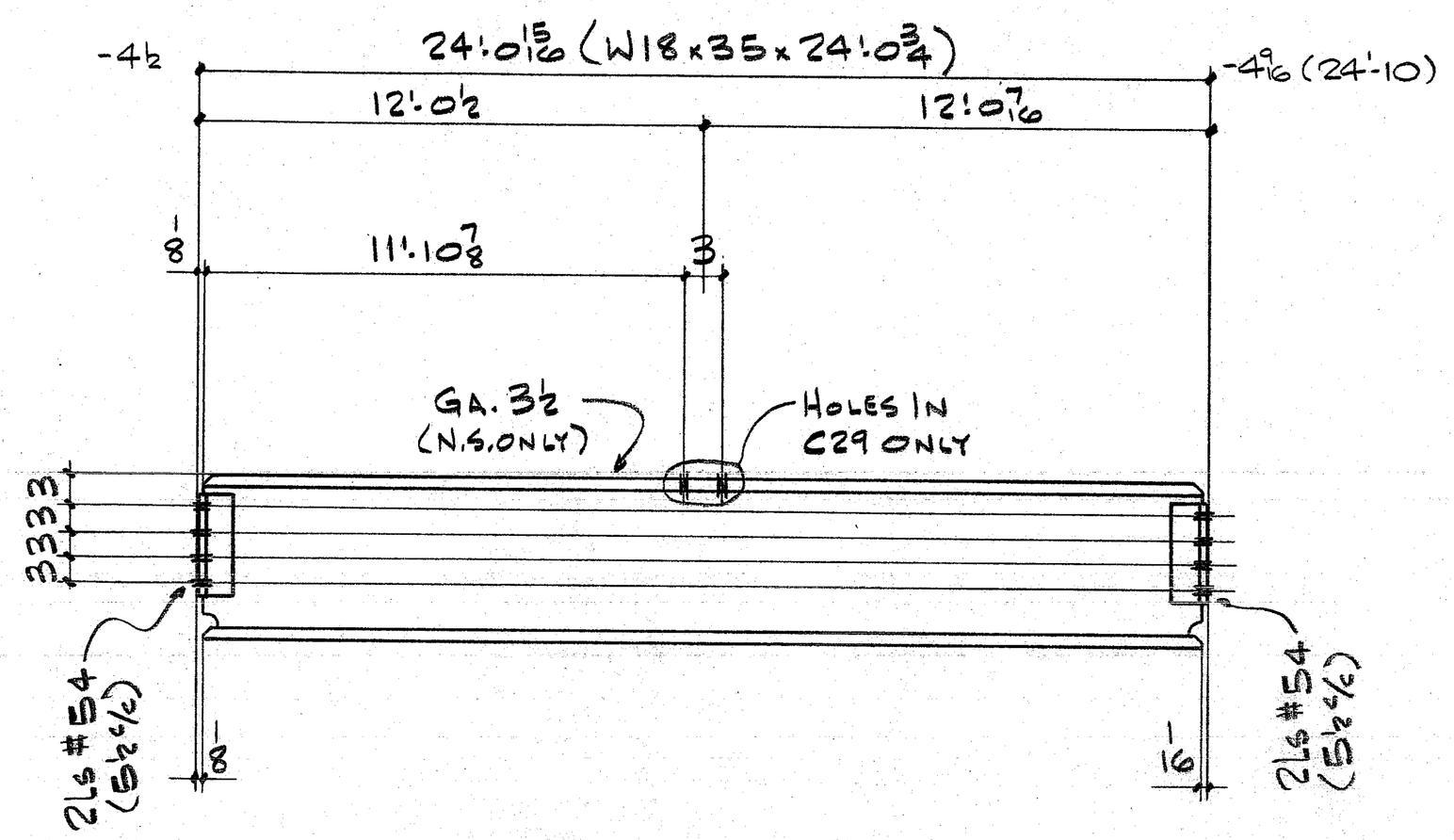

2-BEAMS-B29
ONE- DO -C29

24-¾Φ x 2½ HS w/w 24-¾Φ x 2½ HS w/w

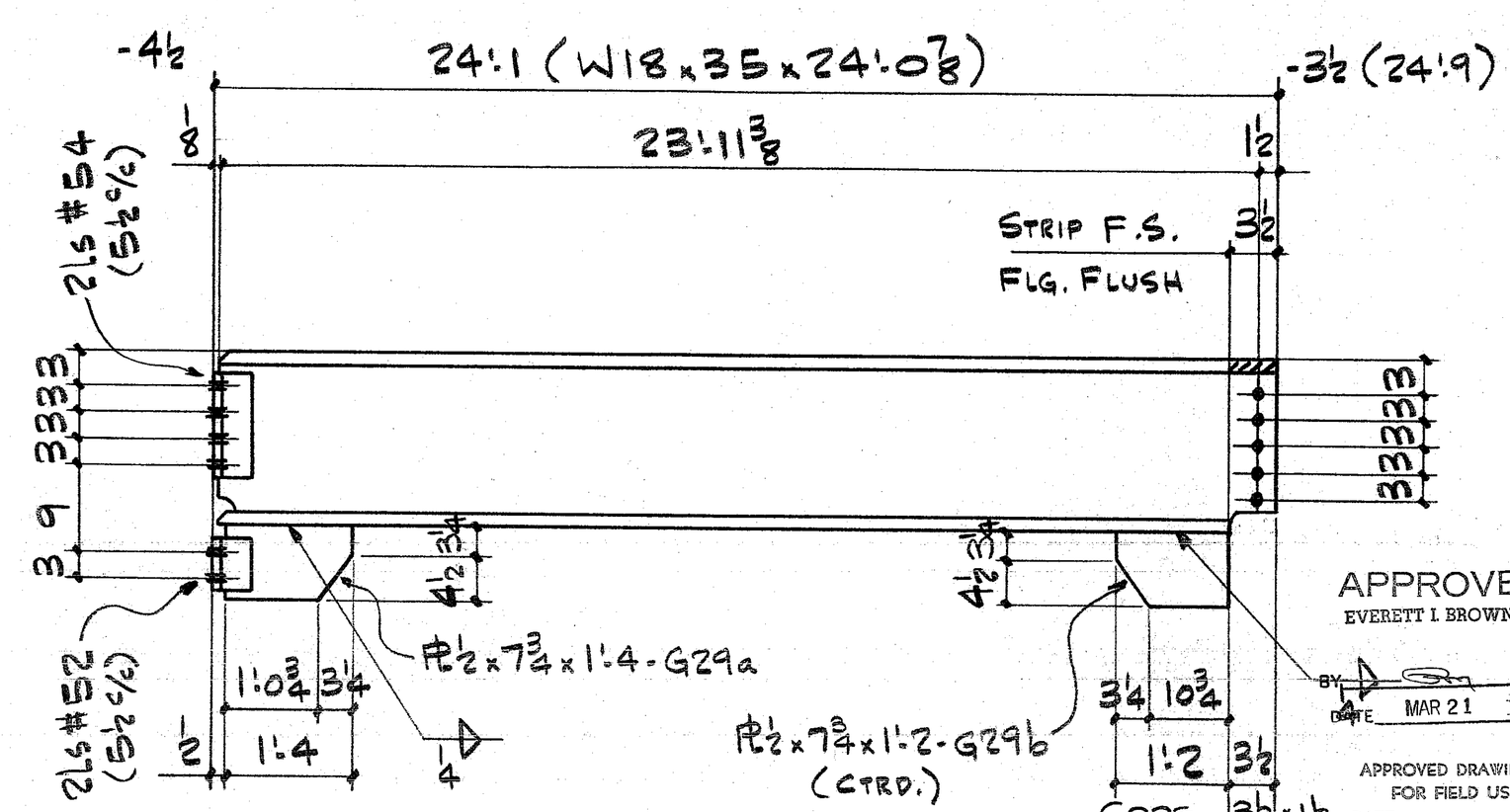

APPROVED
EVERETT I BROWN CO.
BY
DATE MAR 21 3
APPROVED DRAWINGS FOR FIELD USE
DATE

ONE-BEAM-G29 (AS SHN.)
ONE- DO -H29 (OPP. HD.)

ISSUE	#BP	FOR	DATE	BY	REV	DATE	DESCRIPTION	MADE BY
3	4	FIELD	3/9/83	AN				
1	3	APP	12/10/82	AN				

INTERSTATE WELDING & FABRICATION, INC.
1670 DAVIS AVENUE • TERRE HAUTE, INDIANA 47802

HOLES 13/16 Φ
PAINT 1-CT. RED MAB 60802
CLEAN'G.
REF. DWG'S.

JACKSON ELEMENTARY SCHOOL

DWN. BY WK
CHK'D. BY
JOB# 6300
SHT.# 29