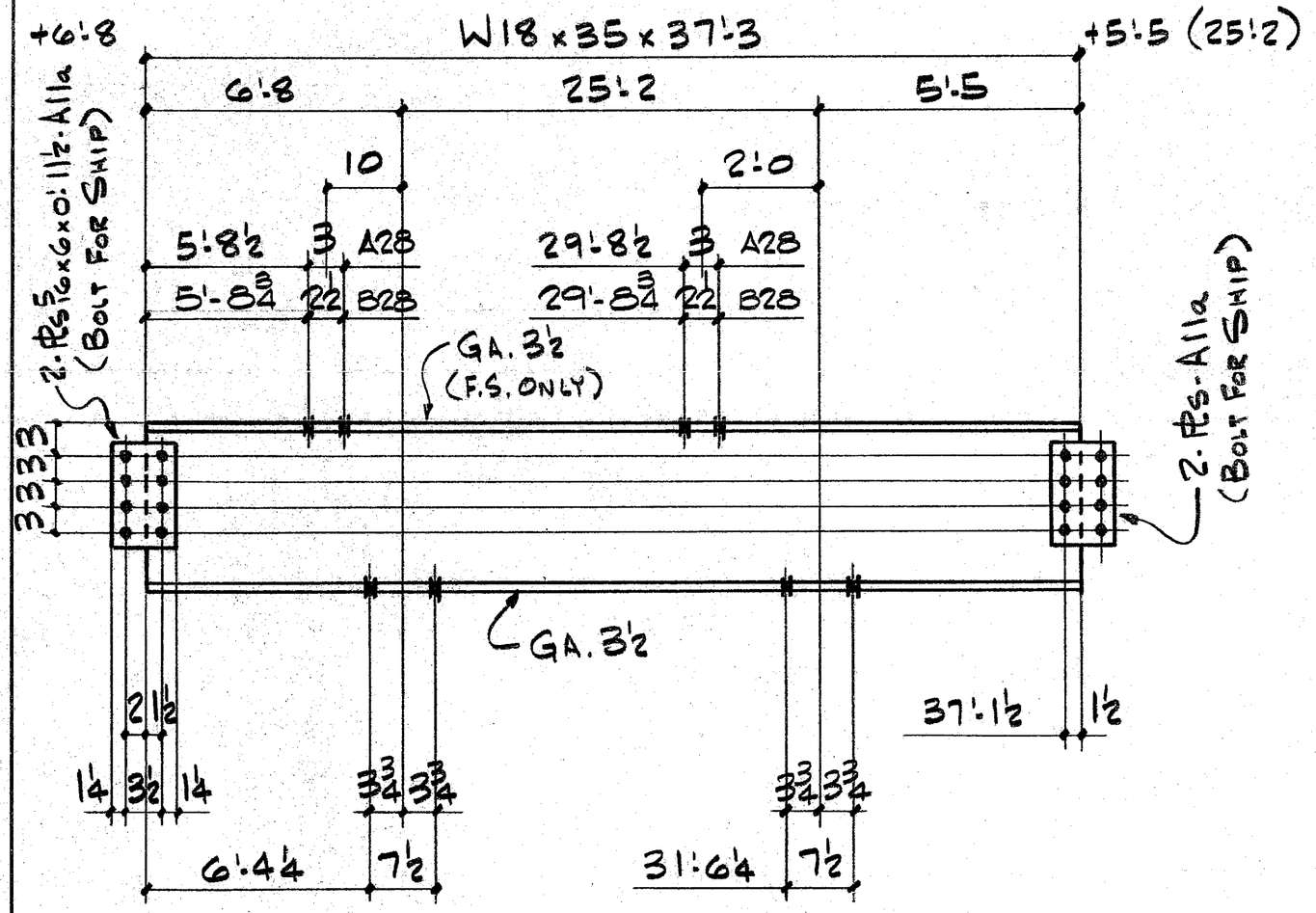

ONE - BEAM - A28 (AS SHN.)
ONE - Do - B28 (OPP. HD.)

4-¾φ x 1¾ MB
16-¾φ x 2¼ HS W/W
12-¾φ x 2 HS W/W

16-¾φ x 2¼ HS W/W
8-¾φ x 2 HS W/W

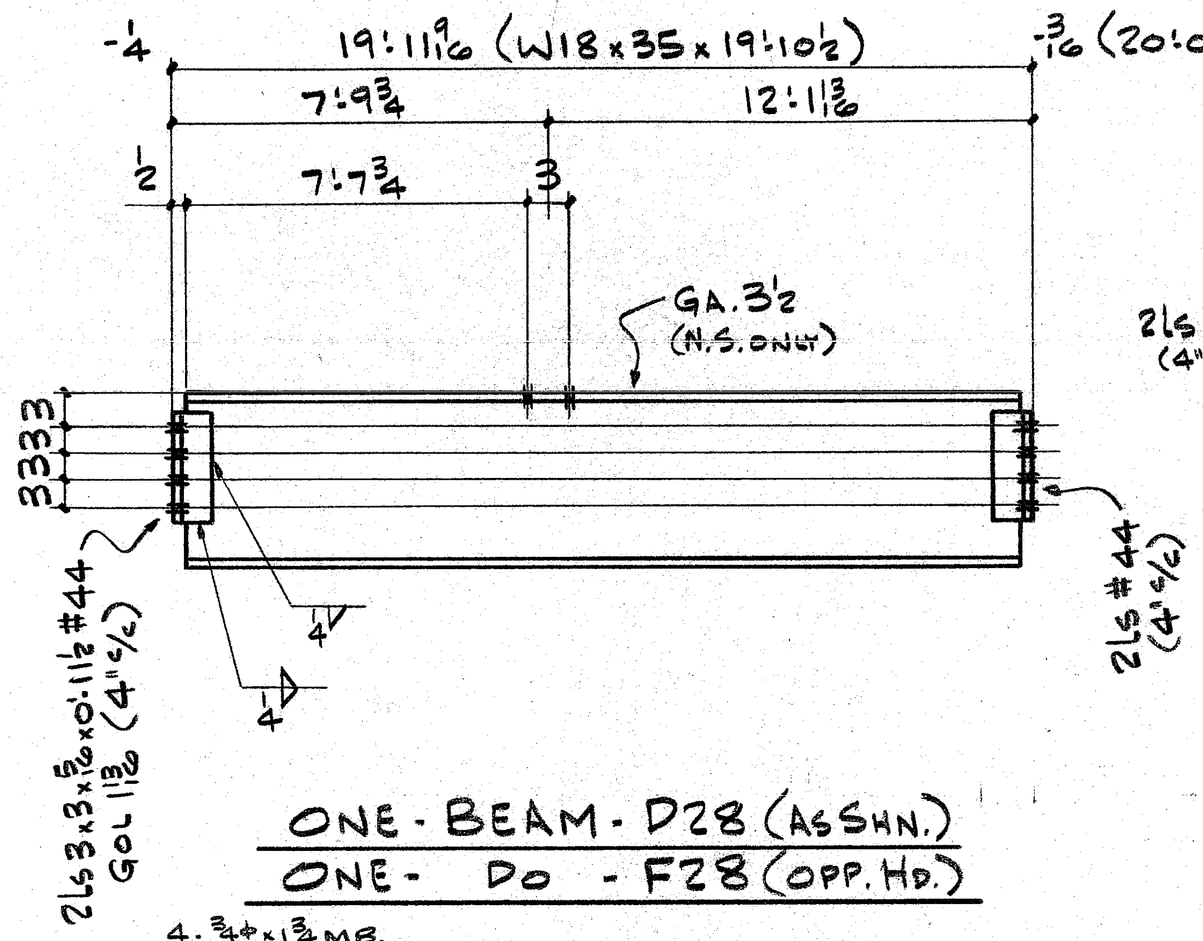

ONE - BEAM - D28 (AS SHN.)
ONE - Do - F28 (OPP. HD.)

4-¾φ x 1¾ MB.
16-¾φ x 2½ HS W/2-W

16-¾φ x 2½ HS W/2-W

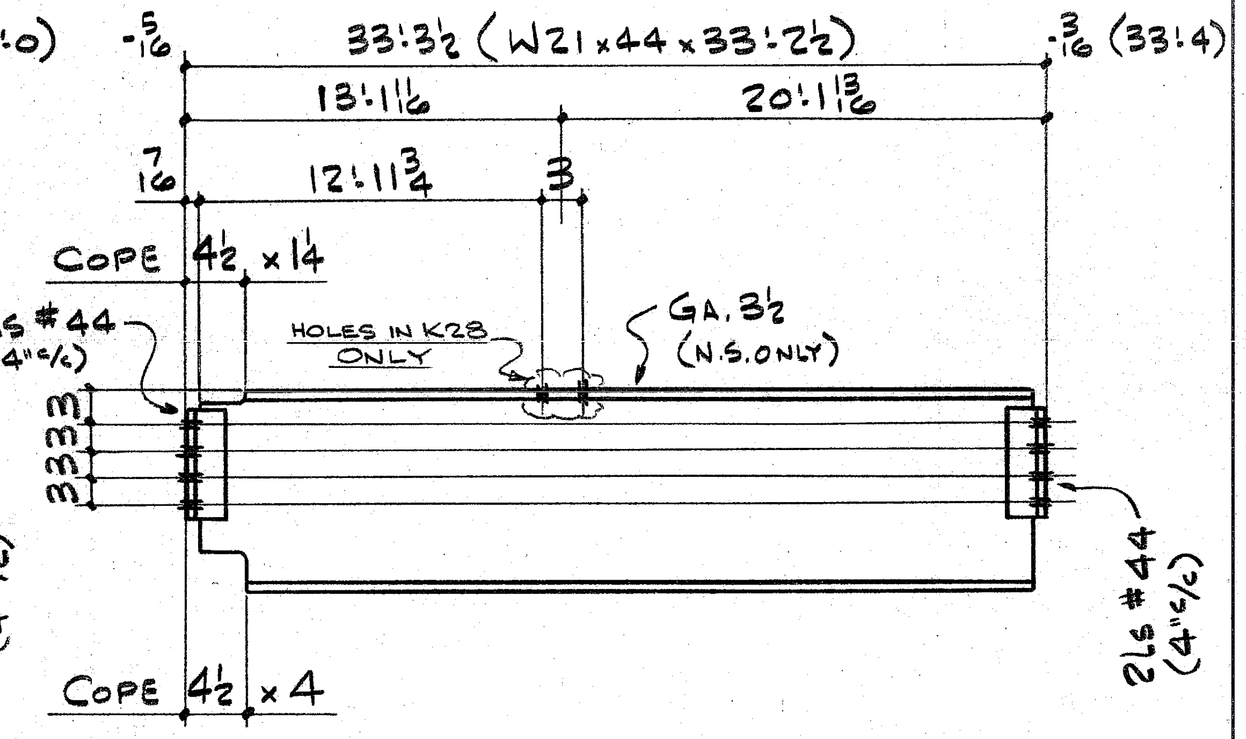

ONE - BEAM - K28
ONE - Do - M28

16-¾φ x 2¼ HS W/W

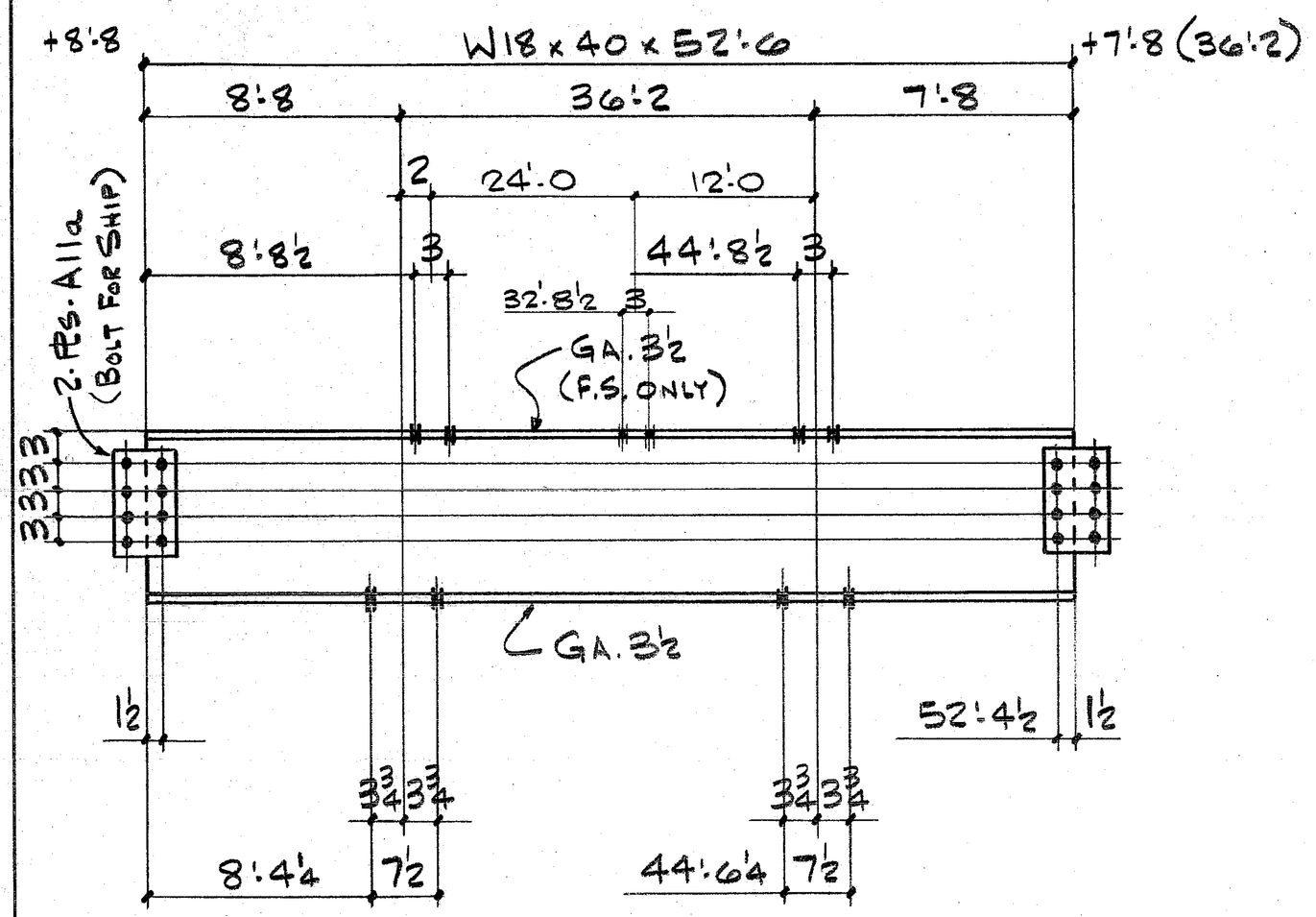

ONE - BEAM - C28

6-¾φ x 1¾ MB
12-¾φ x 2¼ HS W/W

12-¾φ x 2¼ HS W/W

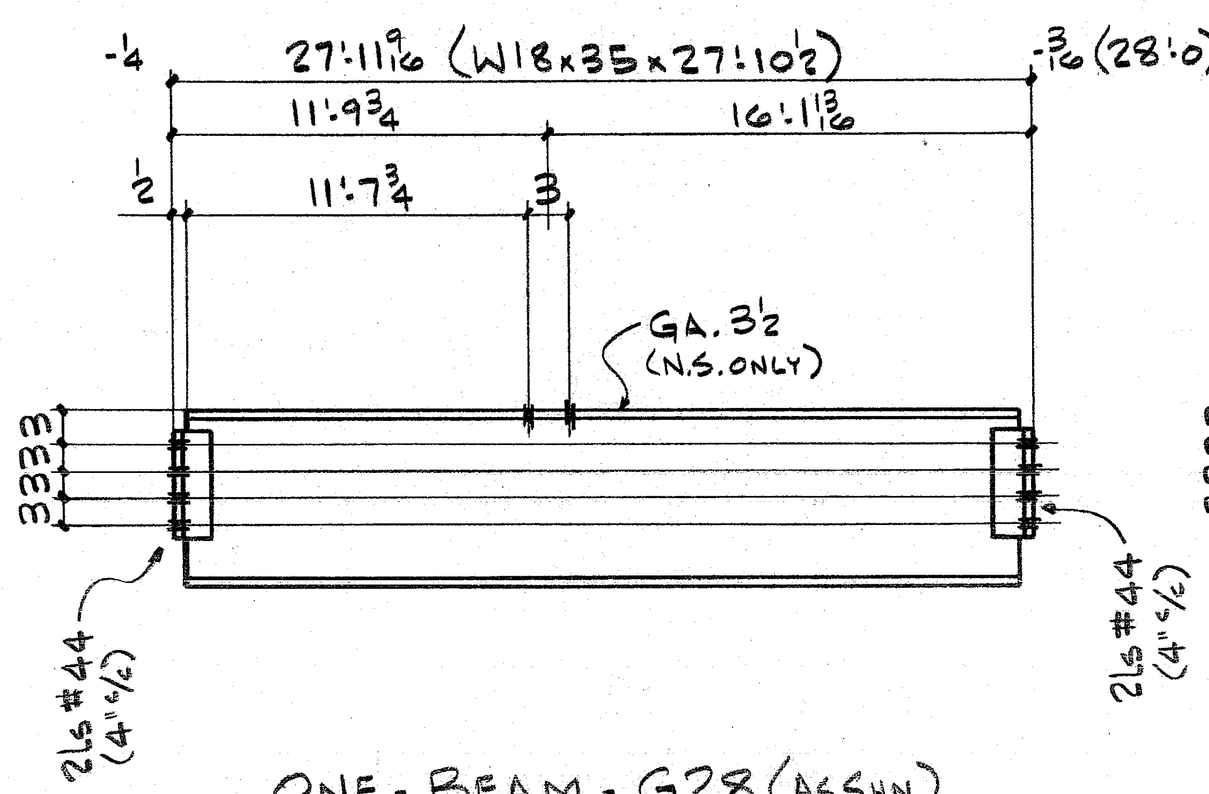

ONE - BEAM - G28 (AS SHN.)
ONE - Do - H28 (OPP. HD.)

16-¾φ x 2½ H.S. W/2-W

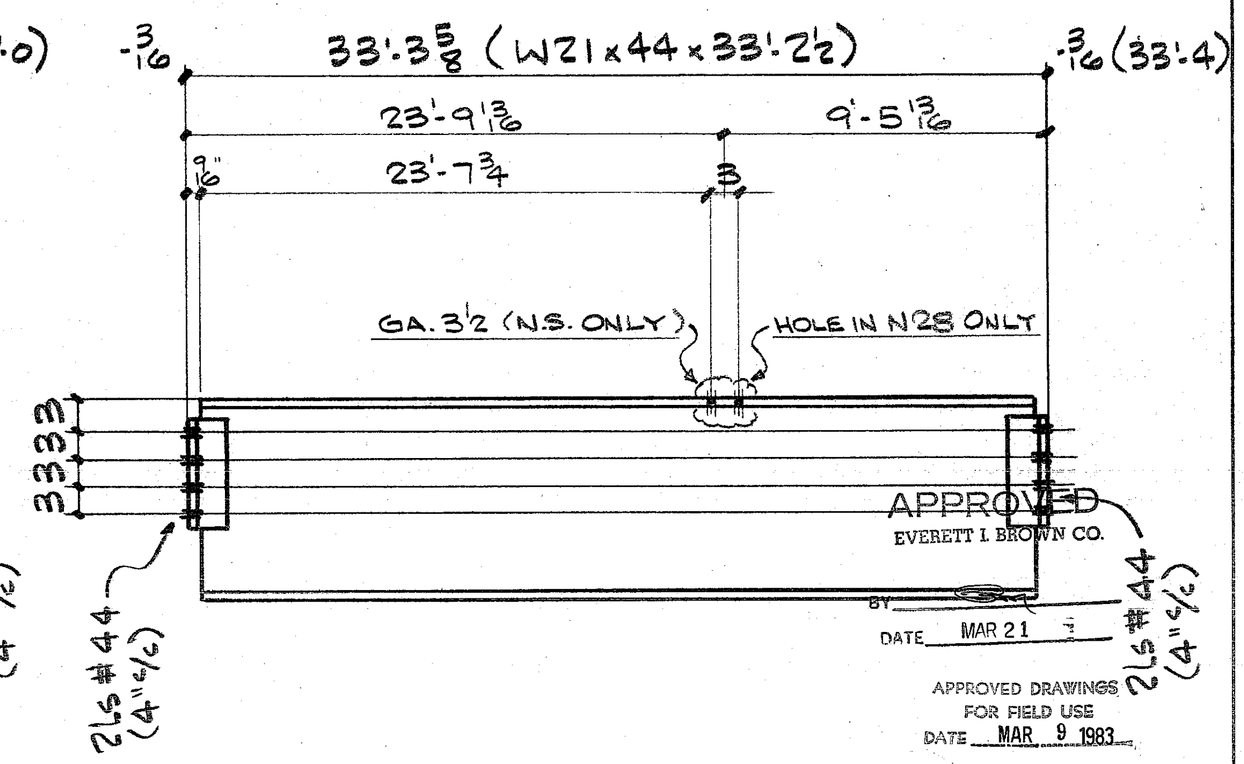

APPROVED
EVERETT I. BROWN CO.
BY
DATE MAR 21
APPROVED DRAWINGS FOR FIELD USE
DATE MAR 9 1983

ONE - BEAM - N28
ONE - Do - P28

2-¾φ x 1¾ M.B.
16-¾φ x 2 H.S. W/W

ISSUE	#BP	FOR	DATE	BY	REV.	DATE	DESCRIPTION	MADE BY
3	4	FIELD	3/9/83	AD				
1	3	APP	12/9/82	FA				

INTERSTATE WELDING & FABRICATION, INC.
1670 DAVIS AVENUE • TERRE HAUTE, INDIANA 47802

HOLES 13/16φ
PAINT 1-CT. RED MAB 60802
CLEAN'G.
REF. DWG'S.

JACKSON ELEMENTARY SCHOOL

DWN. BY WK
CHK'D. BY B.
JOB # 6300
SHT. # 28