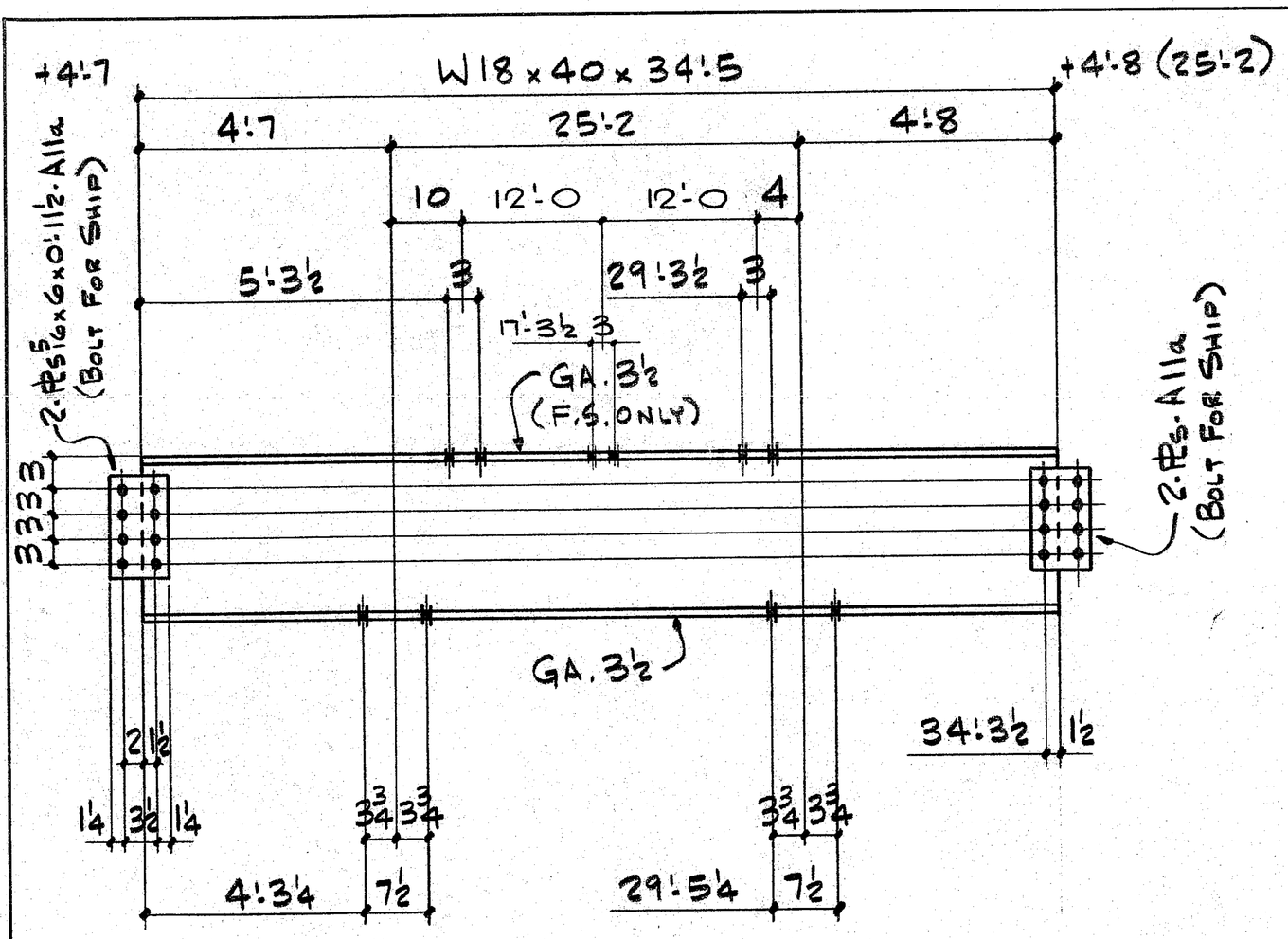

ONE - BEAM - A27 (AS SHN.)
ONE - Do - B27 (OPP. HD.)

24 - 3/4φ x 2¼ HS W/W

24 - 3/4φ x 2¼ HS W/W
12 - 3/4φ x 1¾ M.B.

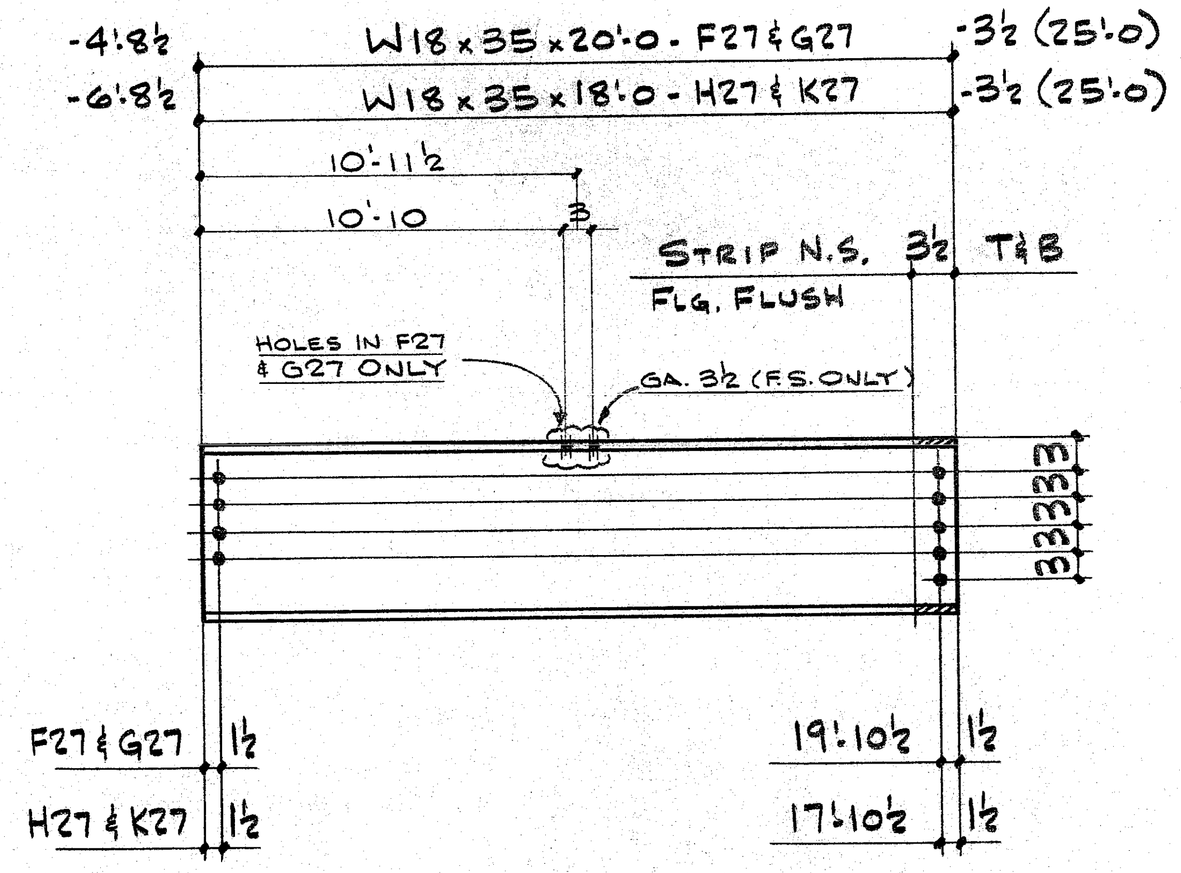

ONE - BEAM - F27 (AS SHN.)
ONE - Do - G27 (OPP. HD.)
ONE - Do - H27 (AS SHN.)
ONE - Do - K27 (OPP. HD.)

4 - 3/4φ x 1¾ M.B.

20 - 3/4φ x 2 HS W/W

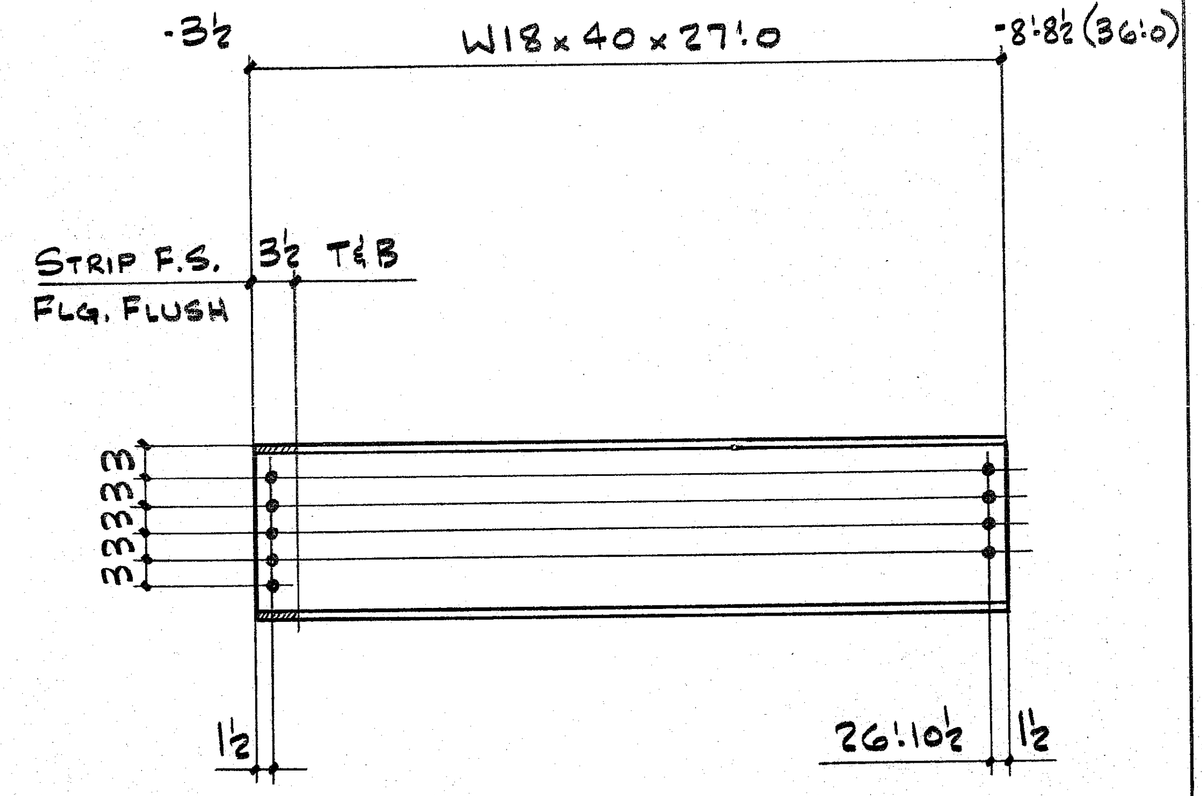

ONE - BEAM - N27

5 - 3/4φ x 2 HS W/W

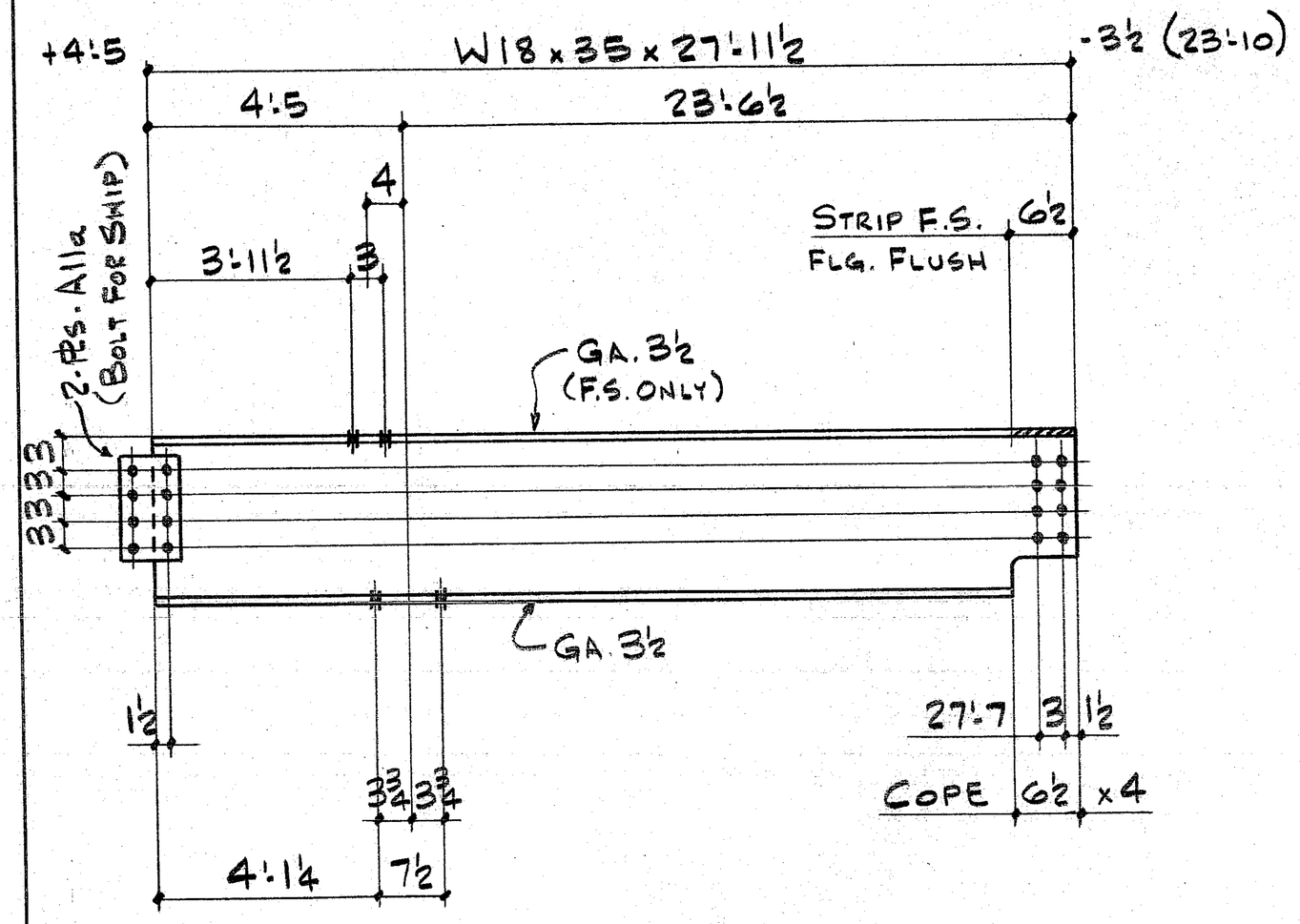

ONE - BEAM - C27 (AS SHN.)
ONE - Do - D27 (OPP. HD.)

4 - 3/4φ x 1¾ MB
16 - 3/4φ x 2¼ HS W/W
8 - 3/4φ x 2 HS W/W

16 - 3/4φ x 2¼ HS W/W

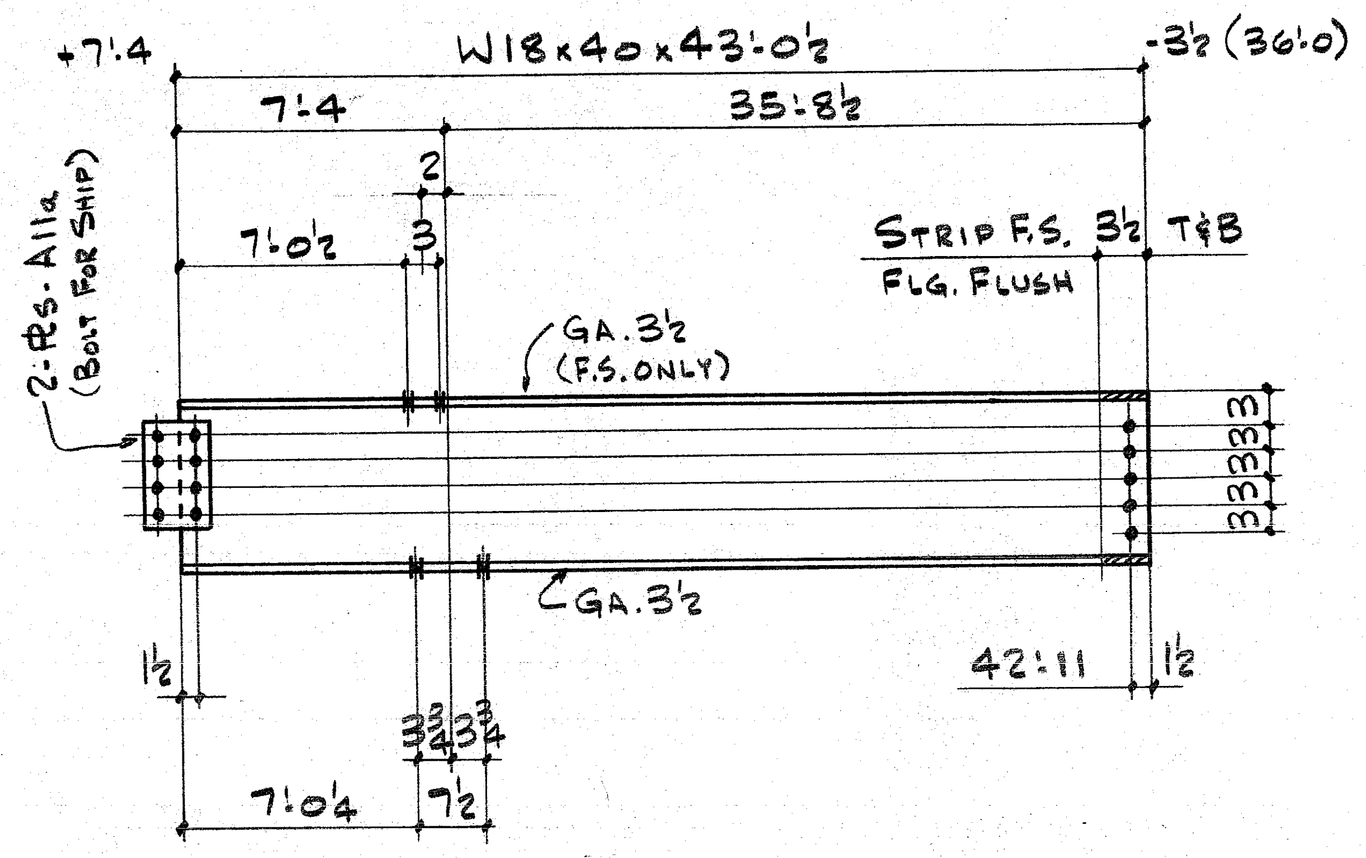

ONE - BEAM - M27

12 - 3/4φ x 2¼ HS W/W
2 - 3/4φ x 1¾ M.B.

5 - 3/4φ x 2 HS W/W

ISSUE	#BP	FOR	DATE	BY	REV.	DATE	DESCRIPTION	MADE BY
3	4	FIELD	3/9/83	AA				
1	3	APP	12/10/82	AA				

INTERSTATE WELDING & FABRICATION, INC.
1670 DAVIS AVENUE • TERRE HAUTE, INDIANA 47802

HOLES 13/32φ
PAINT 1-CT. RED MAB-60802
CLEAN'G.
REF. DWG'S.

JACKSON ELEMENTARY SCHOOL

DWN. BY WK
CHK'D. BY B.
JOB # 6300
SHT. # 27

APPROVED
EVERETT I. BROWN CO.
BY
DATE MAR 21 3
APPROVED DRAWINGS
FOR FIELD USE
DATE MAR 9 1983