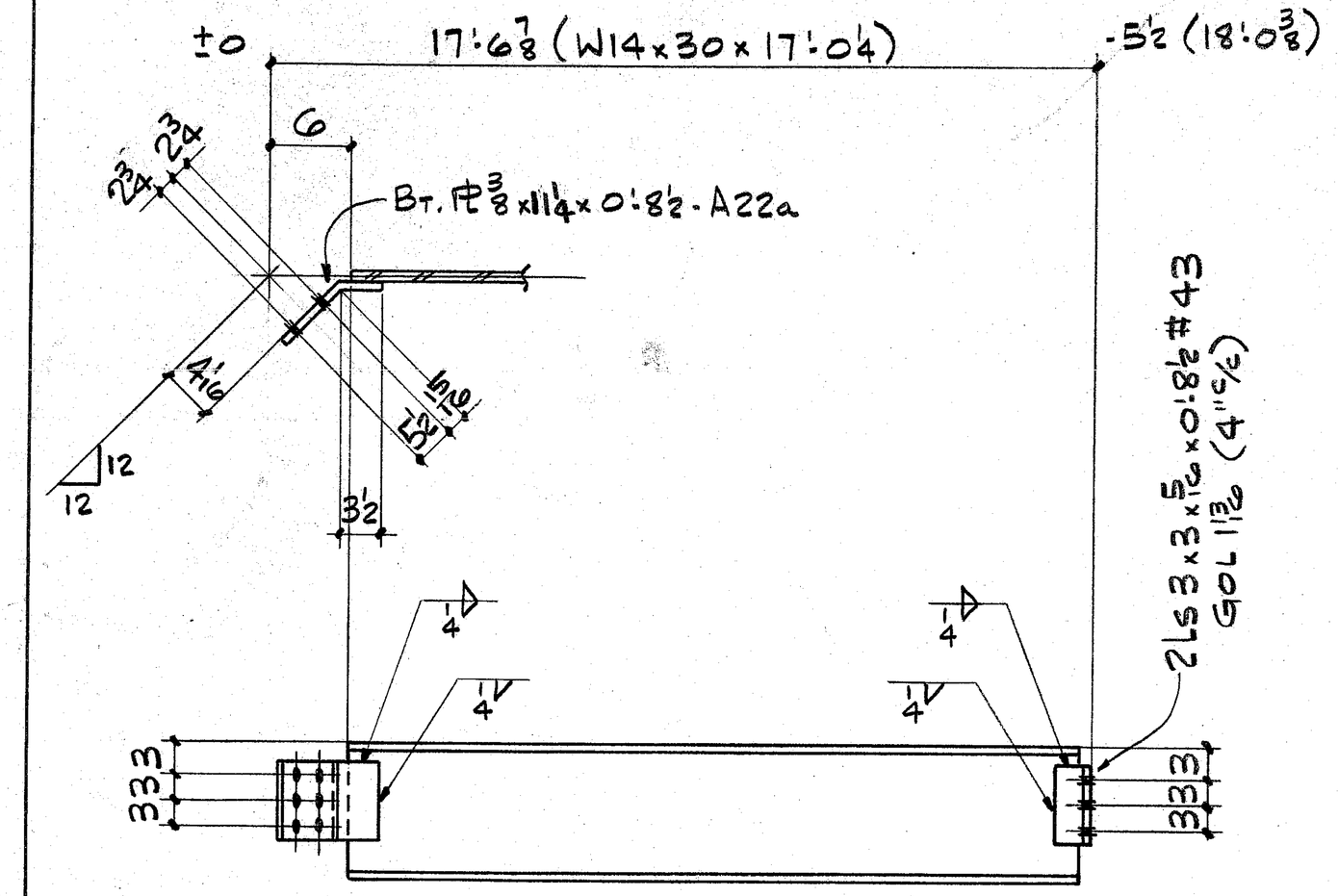

ONE - BEAM - A22 (AS SHN.)
ONE - Do - B22 (OPP. HD.)

12-3/4 x 2 1/4 HS W/W

12-3/4 x 2 1/4 HS W/W

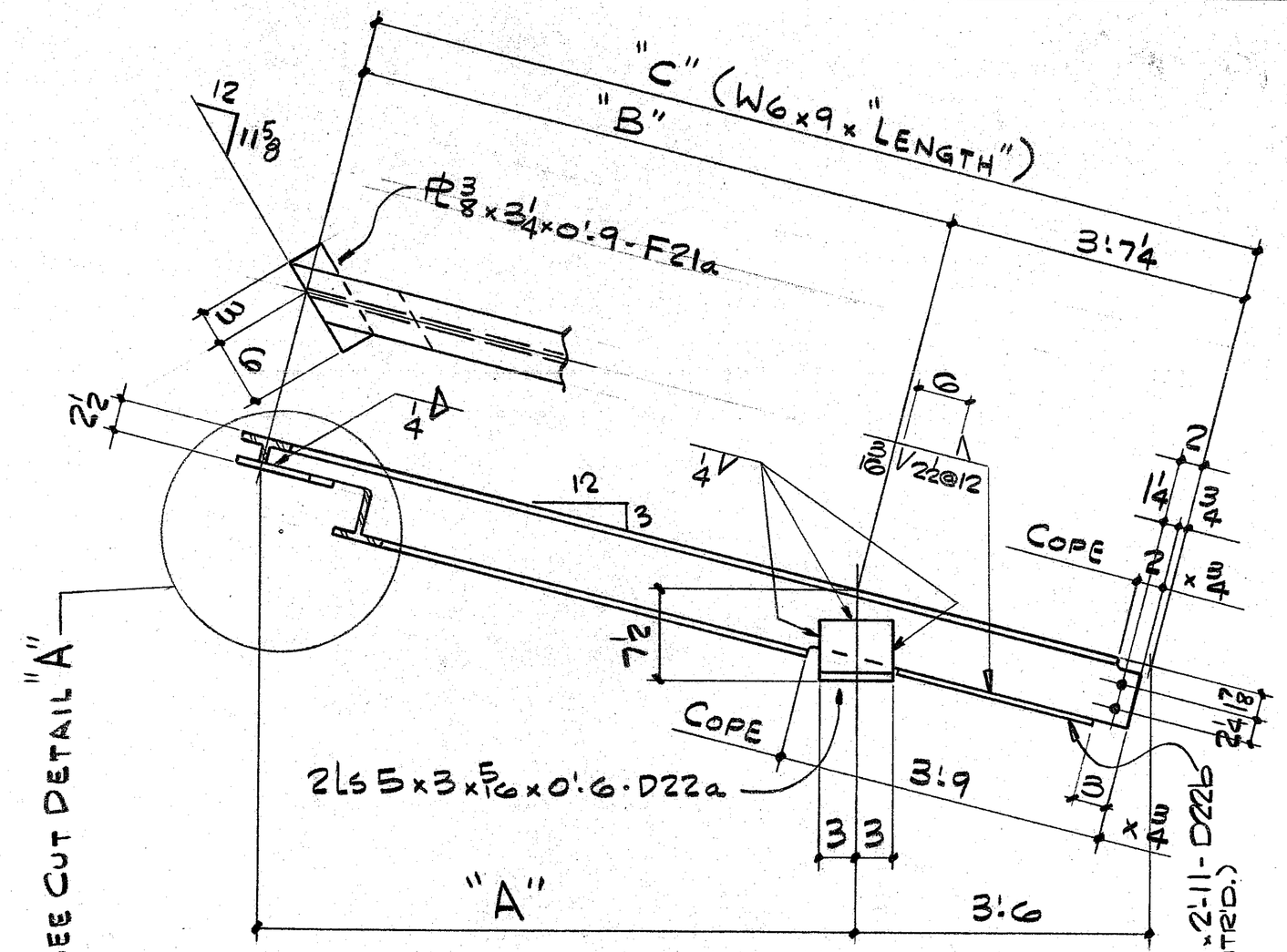

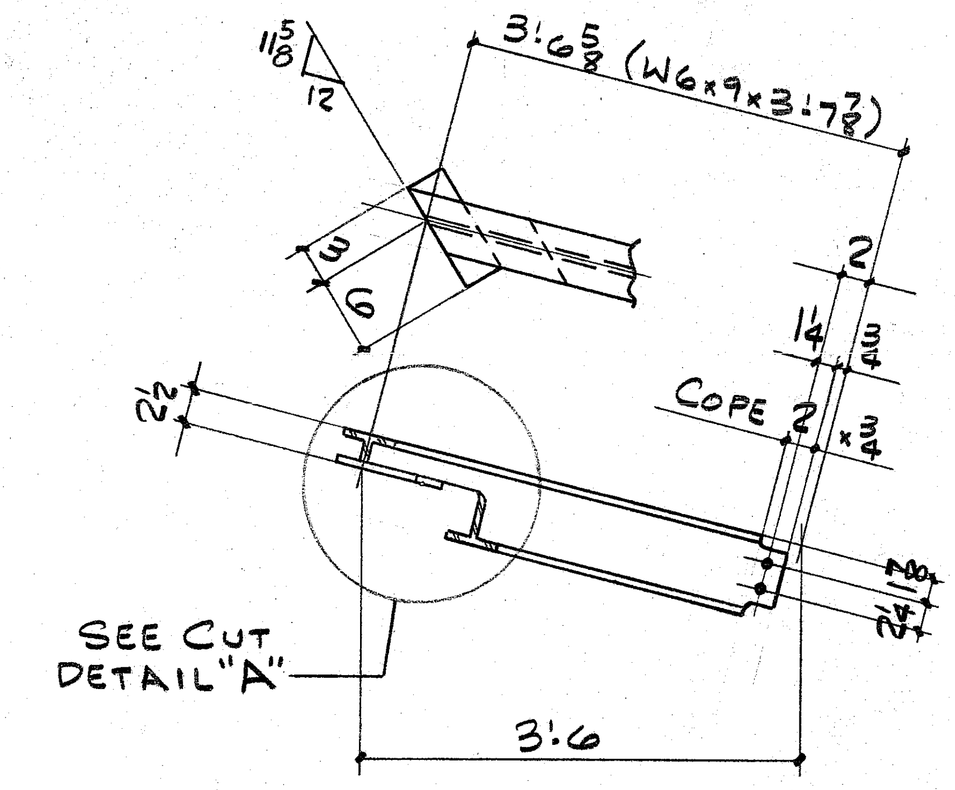

8 - BEAMS - K22 (AS SHN.)
8 - Do - L22 (OPP. HD.)

BEAM SCHEDULE					
QUAN.	A	B	C	LENGTH	MARK
8	4'-2	4'-2 7/8	7'-10 1/8	7'-11 3/8	D22 (AS SHN.)
8	Do	Do	Do	Do	F22 (OPP. HD.)
8	8'-2	8'-4 3/8	11'-11 5/8	12'-0 7/8	G22 (AS SHN.)
8	Do	Do	Do	Do	H22 (OPP. HD.)

{4 - UNIT A, 4 - UNIT B}

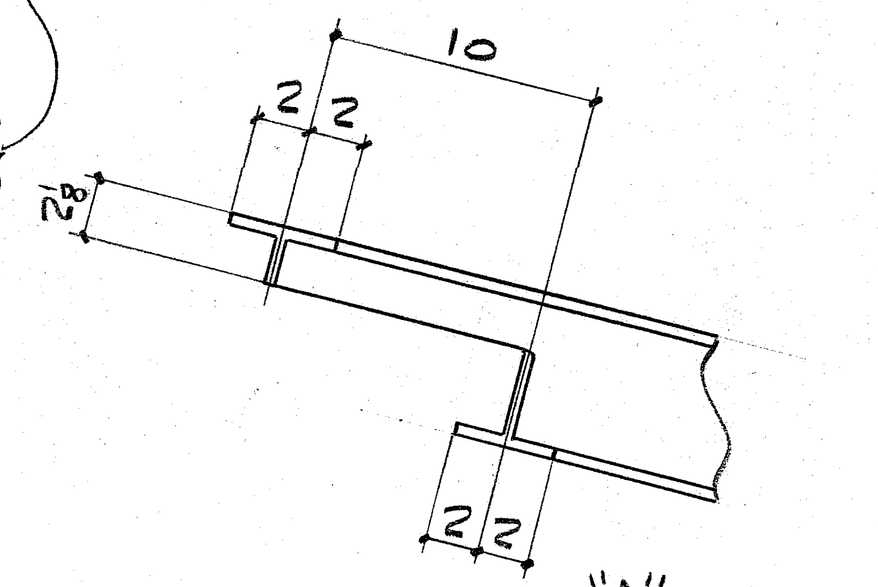

CUT DETAIL "A"

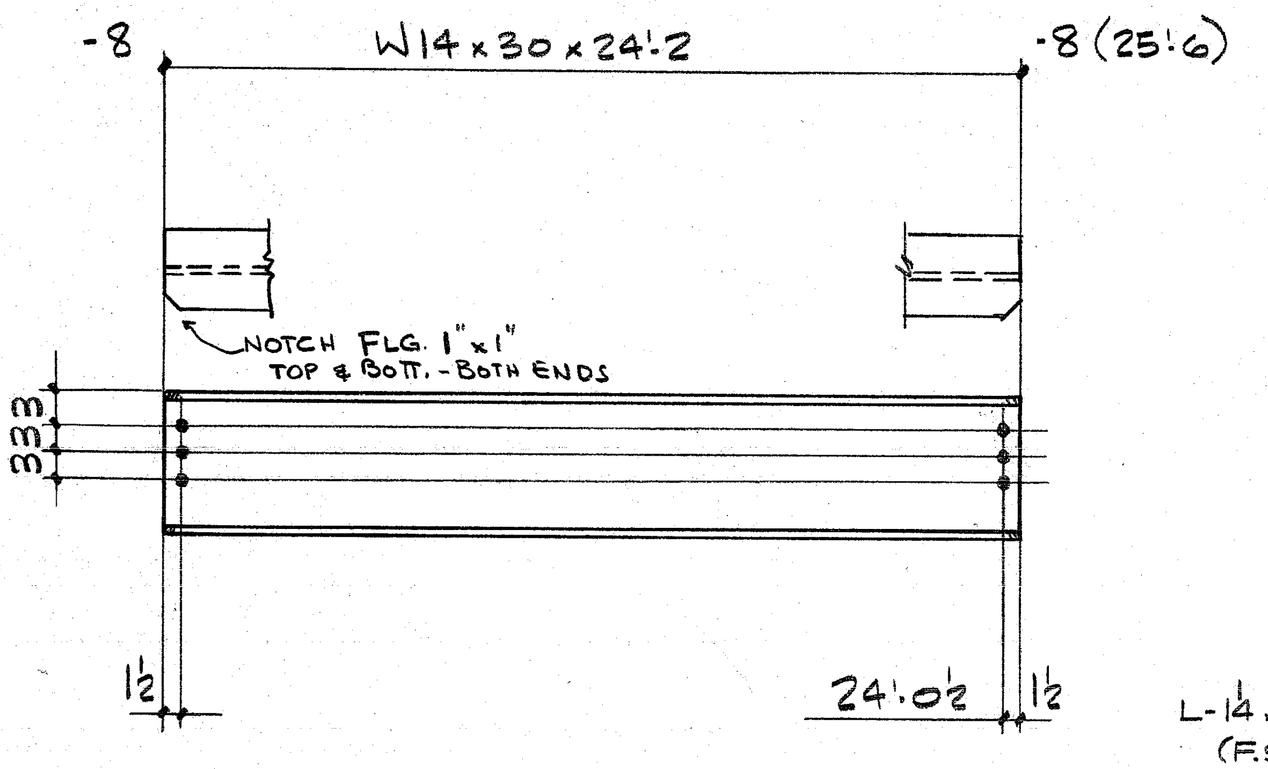

ONE - BEAM - C22

3-3/4 x 2 HS W/W

3-3/4 x 2 HS W/W

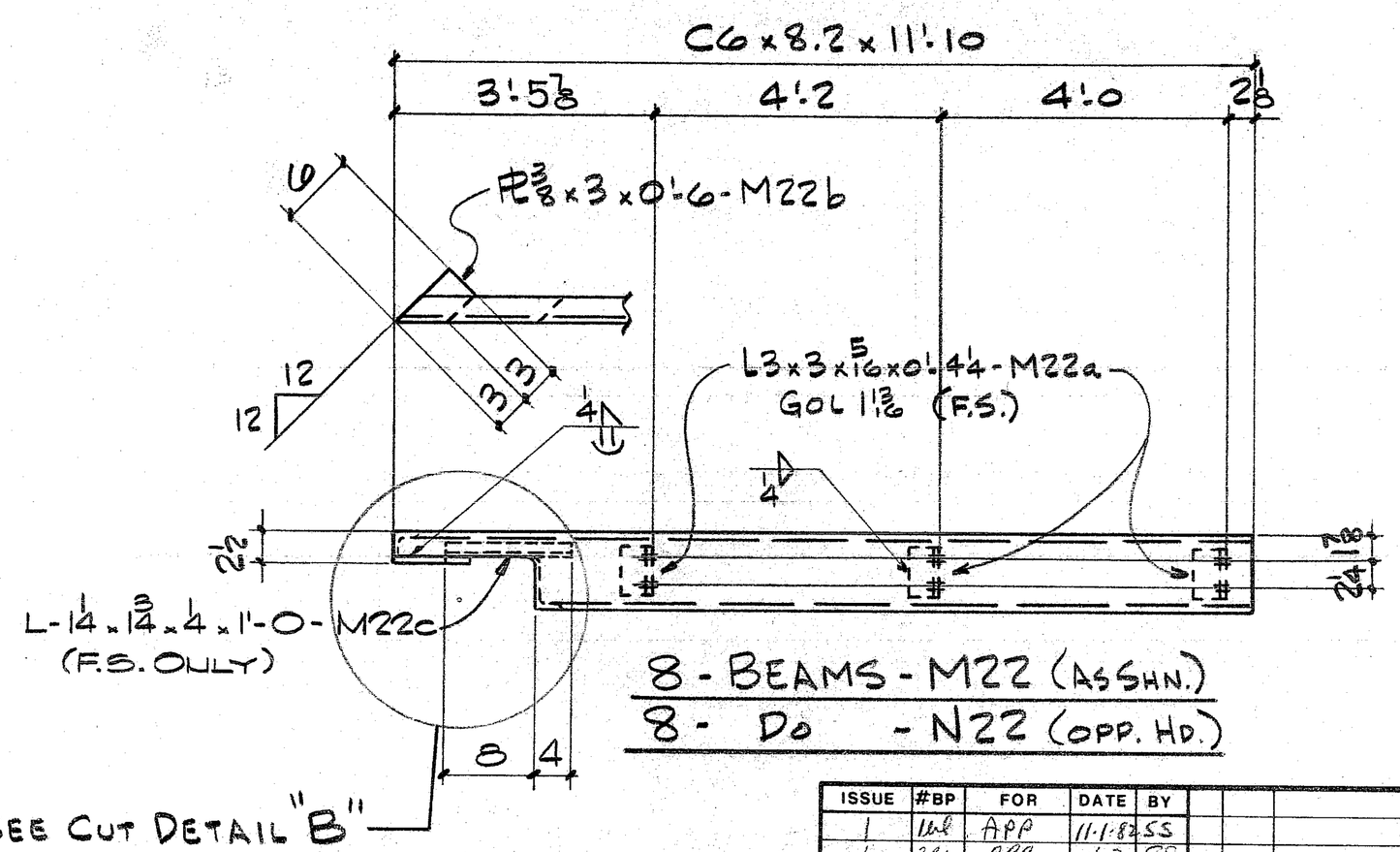

8 - BEAMS - M22 (AS SHN.)
8 - Do - N22 (OPP. HD.)

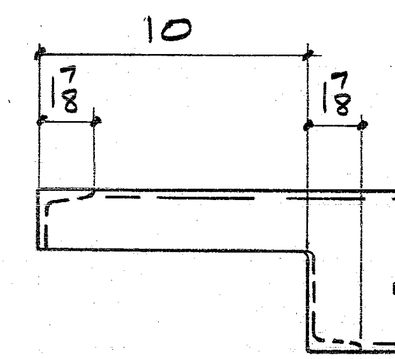

CUT DETAIL "B"

APPROVED DRAWINGS FOR FIELD USE
DATE MAR 9 1983
APPROVED
EVERETT I. BROWN CO.
BY
DATE MAR 21

ISSUE	#BP	FOR	DATE	BY
1	Wk	APP	11-1-82	SS
1	SBL	APP	11-3	SS
3	1	F&B		
4	4	FIELD	8/9/83	AJ

REV.	DATE	DESCRIPTION	MADE BY
1	11/22	APPROVAL	SS

INTERSTATE WELDING & FABRICATION, INC.
1670 DAVIS AVENUE • TERRE HAUTE, INDIANA 47802

HOLES 13/16 ⌀
PAINT 1-CT. RED MAB-60802
CLEAN'G.
REF. DWG'S.

JACKSON ELEMENTARY SCHOOL

UNIT A (U.N.)
DWN. BY WK
CHK'D. BY B.
JOB # 6300
SHT. # 22