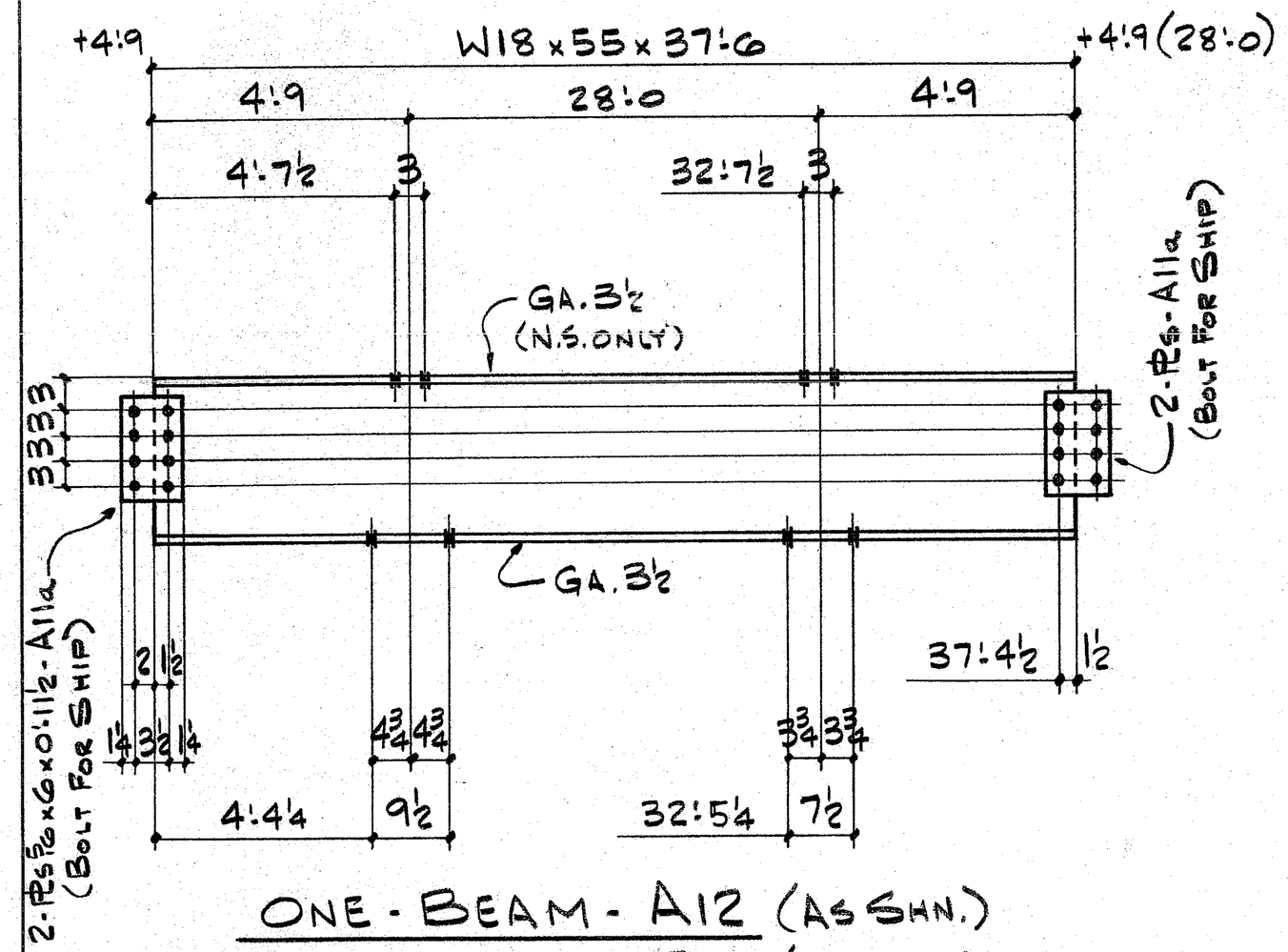

ONE - BEAM - A12 (AS SHN.)
ONE - DO - B12 (OPP. HD.)

24-¾φ x 2¼ HS W/W
4-¾φ x 1¾ MB

24-¾φ x 2¼ HS W/W
4-¾φ x 1¾ MB

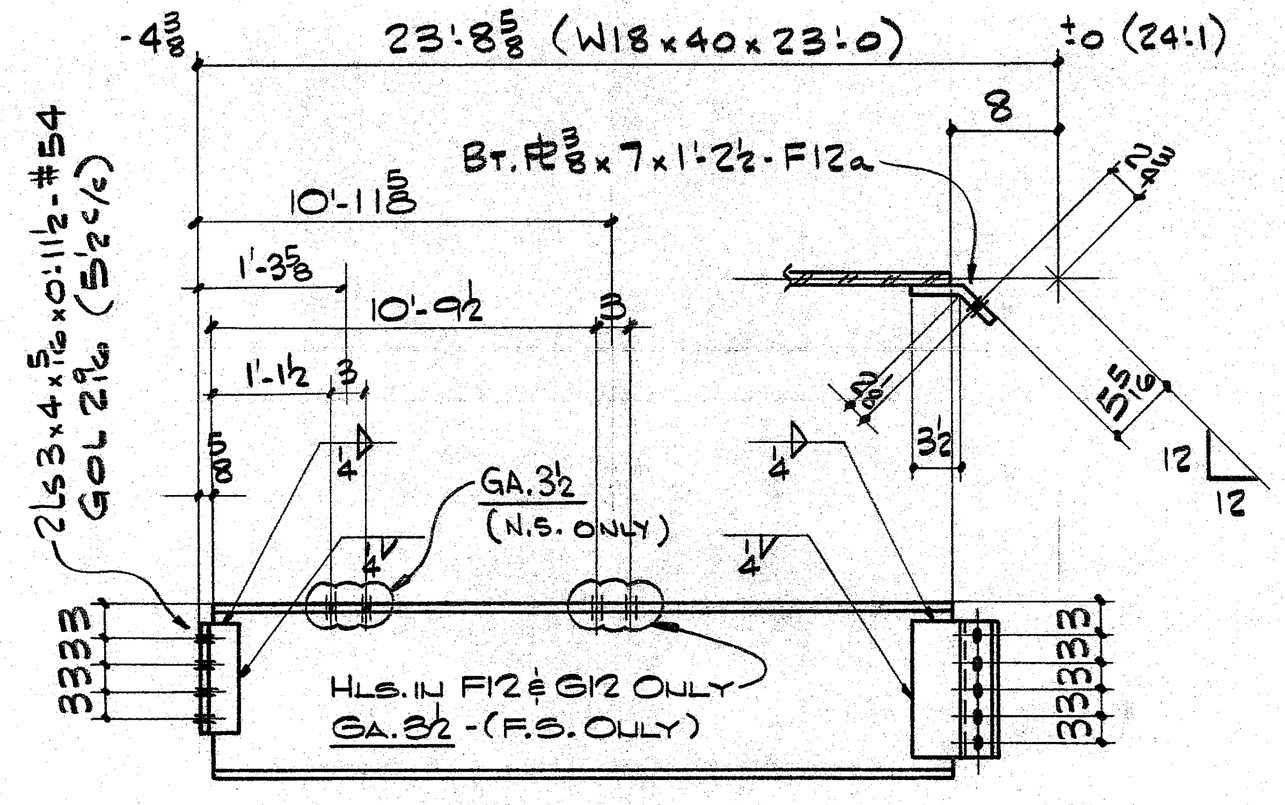

2 - BEAMS - F12 (AS SHN.)
ONE - BEAM - G12 (OPP. HD.)
ONE - DO - M12 (OPP. HD.)

32-¾φ x 2½ HS W/W
14-¾φ x 1¾ MB

20-¾φ x 2½ HS W/W

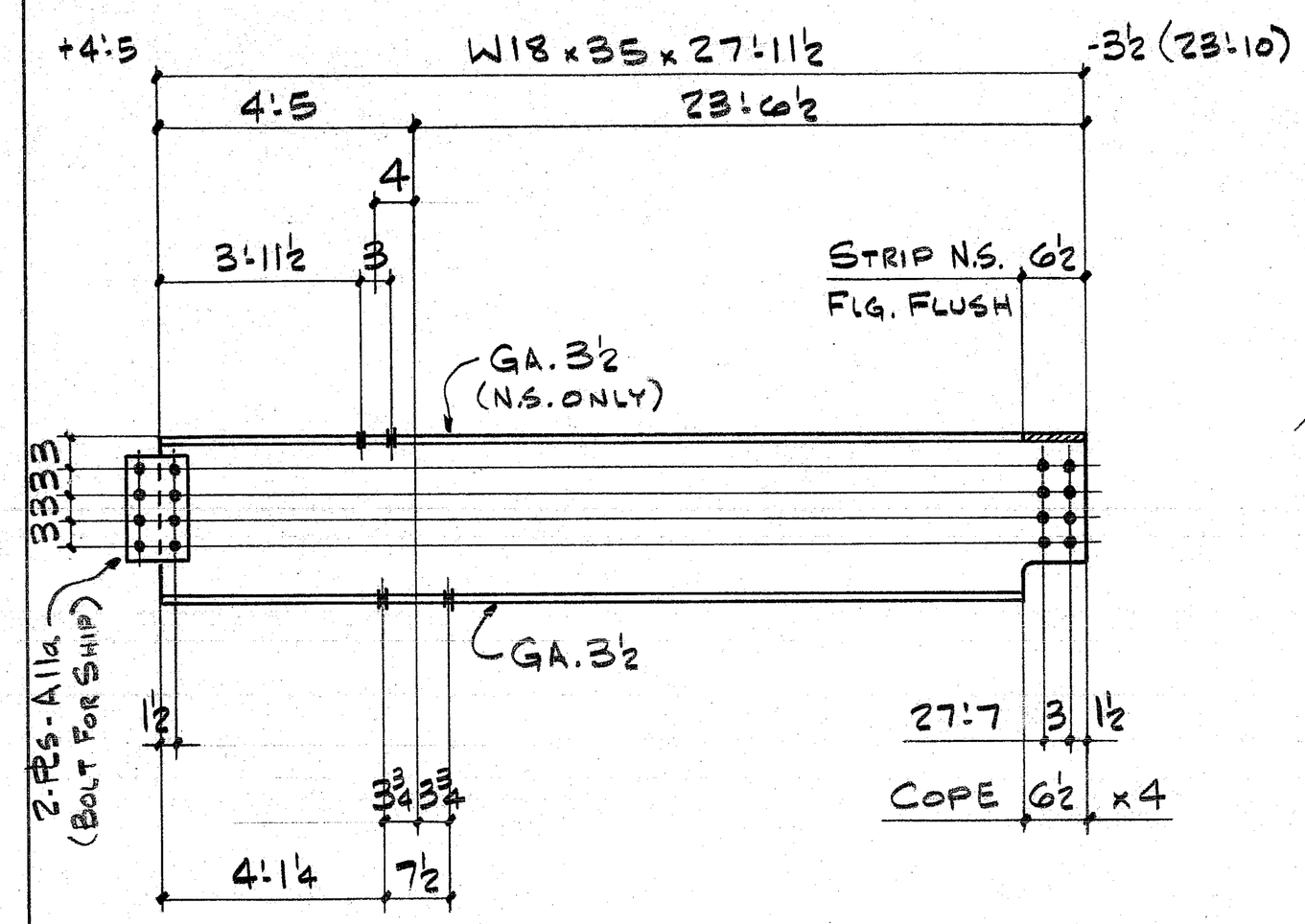

ONE - BEAM - C12 (AS SHN.)
ONE - DO - D12 (OPP. HD.)

4-¾φ x 1¾ MB
16-¾φ x 2¼ HS W/W
8-¾φ x 2 HS W/W

16-¾φ x 2¼ HS W/W

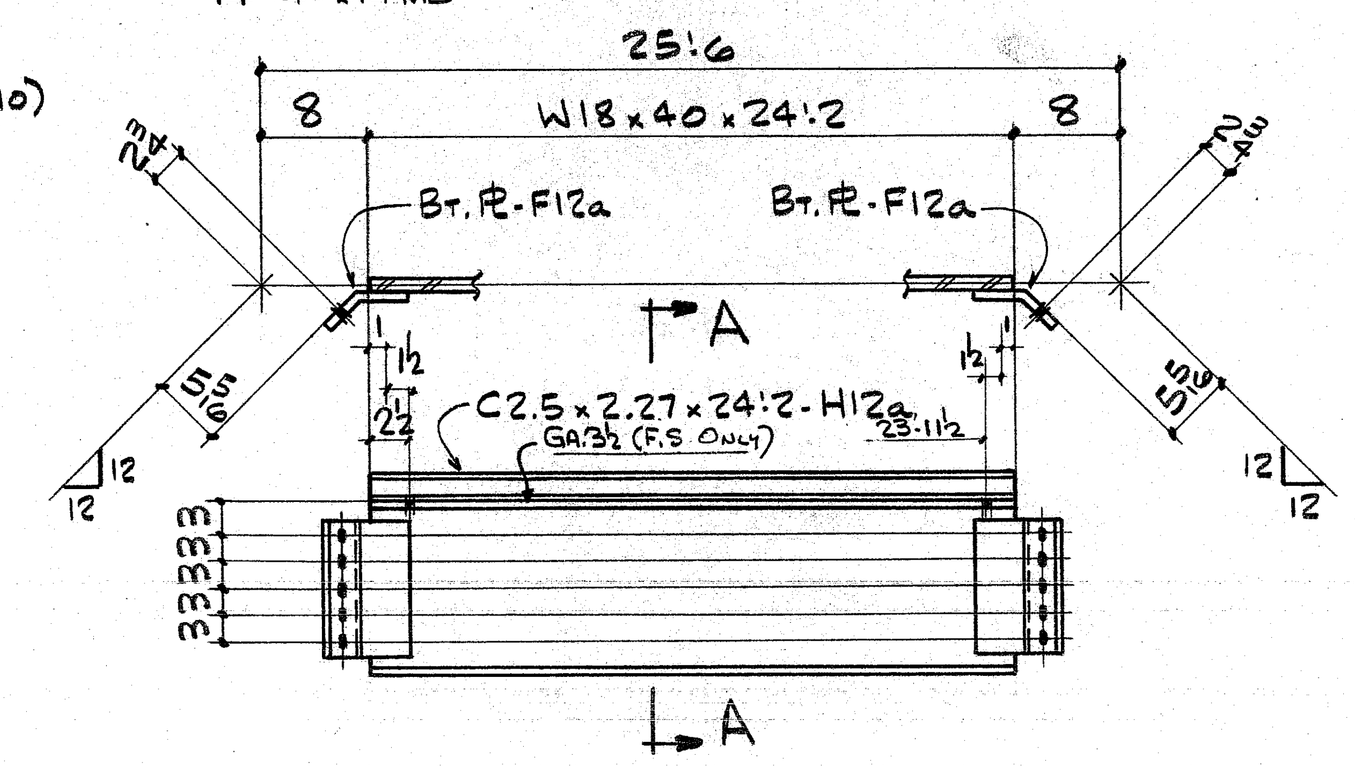

ONE - BEAM - H12 (AS SHN.)
ONE - DO - K12 (OPP. HD.)

10-¾φ x 2½ HS
4-¾φ x 1¾ M.B.

10-¾φ x 2½ HS

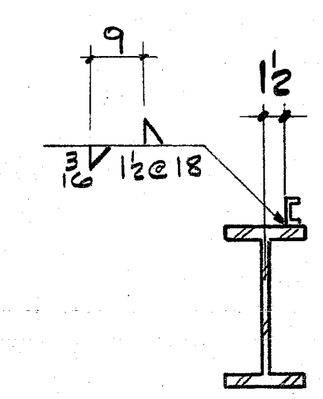

SECTION A-A

APPROVED
EVERETT I. BROWN CO.
BY
DATE MAR 21 3
APPROVED DRAWINGS FOR FIELD USE
DATE

UNIT A

ISSUE	#BP	FOR	DATE	BY
1	128	APP	11-1-82	SS
2	38L	APP	11-3	SS
3		FOB		
4	4	FIELD	3/9/83	AA

REV.	DATE	DESCRIPTION	MADE BY
1	11/22	APPROVAL	SS

INTERSTATE WELDING & FABRICATION, INC.
1670 DAVIS AVENUE • TERRE HAUTE, INDIANA 47802

HOLES 13/16φ
PAINT 1-CT. RED MAB-60802
CLEAN'G.
REF. DWG'S.

JACKSON ELEMENTARY SCHOOL

DWN. BY WK
CHK'D. BY B.
JOB # 6300
SHT. # 12