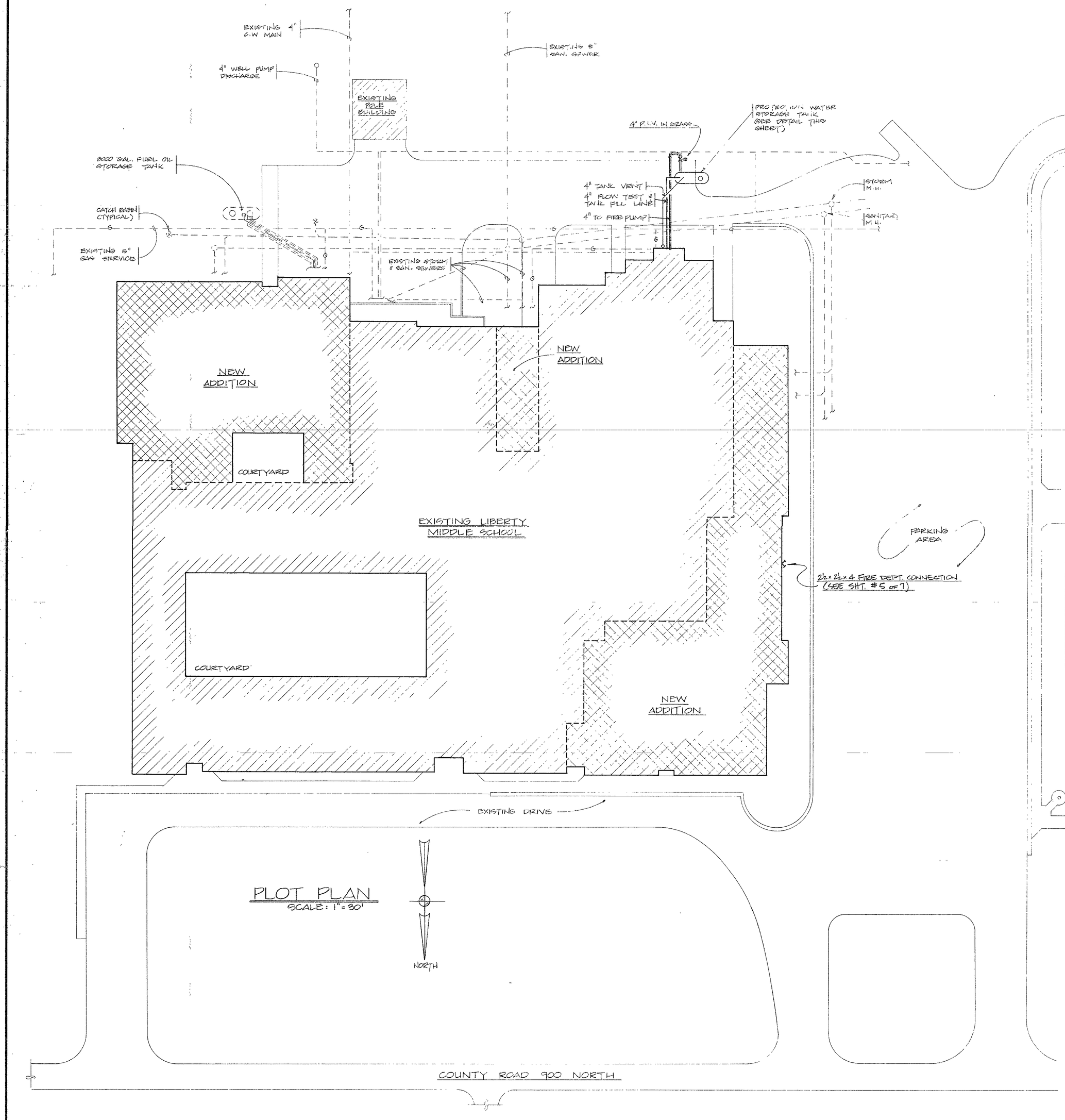

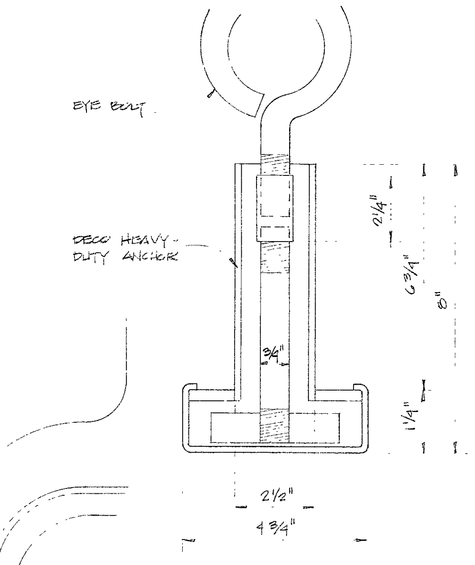

ANCHOR DETAIL
NO SCALE

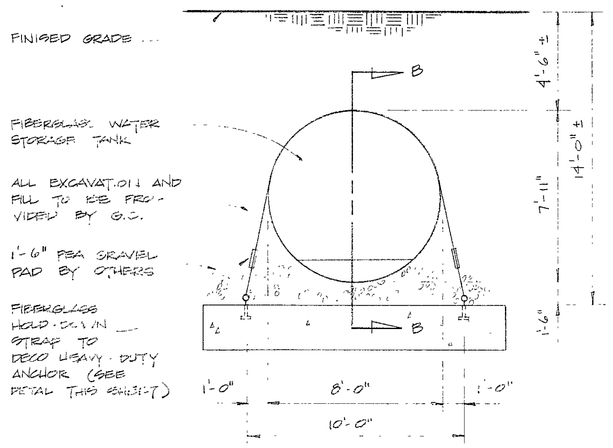

SECTION "A-A"
SCALE: 1/4" = 1'-0"

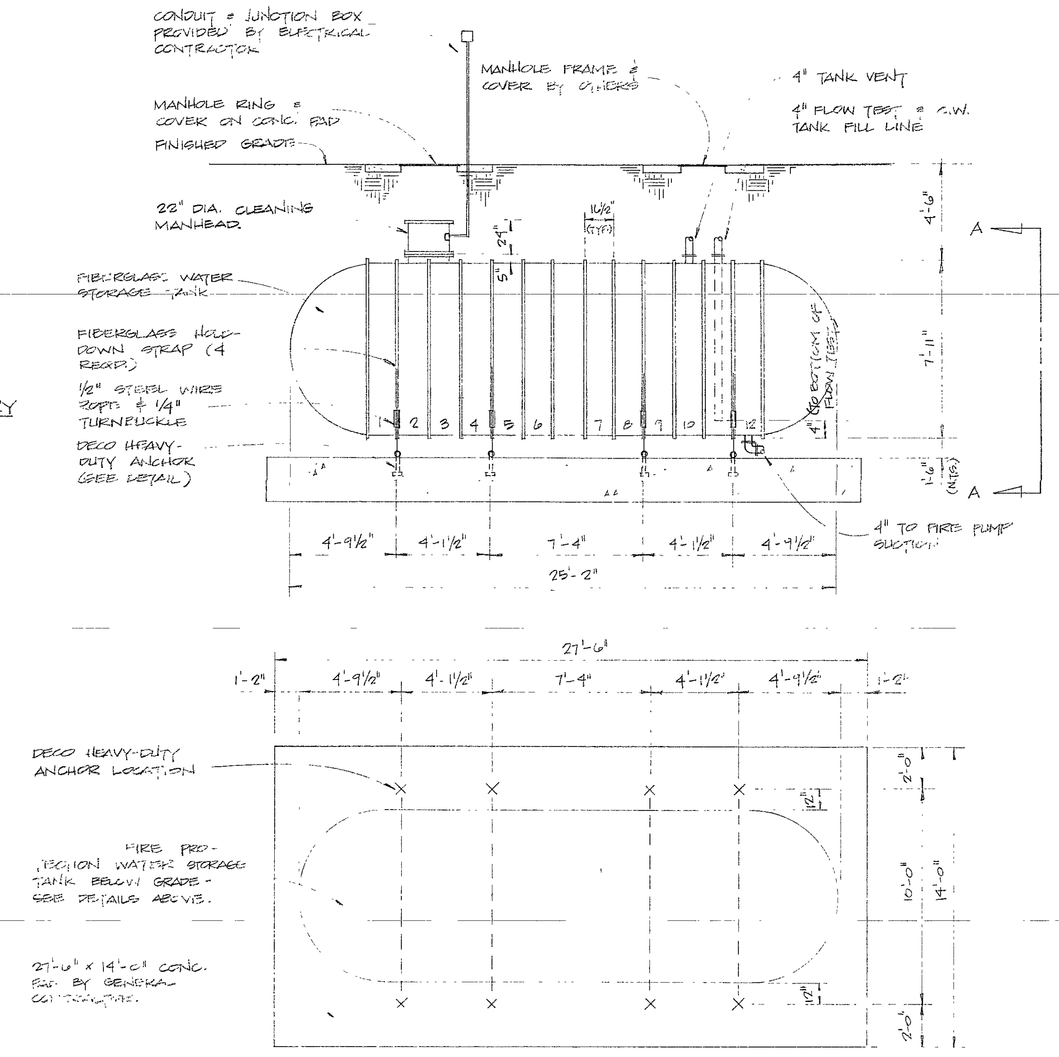

WATER STORAGE TANK DETAILS
SCALE: 1/4" = 1'-0"

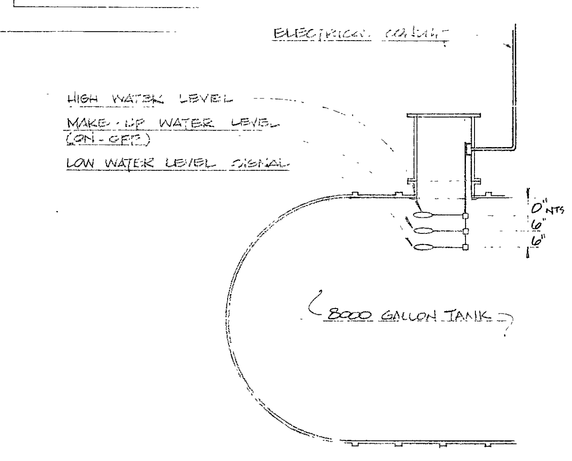

SECTION "B-B"

EXISTING LIBERTY ELEMENTARY SCHOOL

SUBMITTED FOR APPROVAL
TO: Fire Marshal
SHAMBAUGH JOB #
DATE: 8/29/85
BY: GLL
SHAMBAUGH & SON FIRE PROTECTION

RELEASED FOR INSTALLATION to compliance with all applicable Rules and Regulations of the FIRE PREVENTION AND BUILDING SAFETY COMMISSION and LOCAL AUTHORITIES
Wm C. Bradley
STATE FIRE MARSHAL
9-10-85

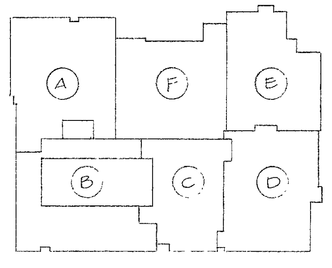

KEY PLAN
NO SCALE
N

ITEM	REVISION	BY	DATE
2			
1			

LIBERTY MIDDLE SCHOOL
R. ROUTE #1, BOX 356
CHESTERTON, INDIANA 46304

A B C PROJECT NO 72046

SHAMBAUGH & SON, INC.
Fire Protection Division

- FORT WAYNE, INDIANA 9011 FRONT STREET, 46818
- INDIANAPOLIS, INDIANA 1010 EAST SUMNER AVE., 46227
- EVANSVILLE, INDIANA 2131 COMMERCIAL COURT, 47712

85-FP-01

DEGREE OF SPRINKLER							
TYPE OF SPRINKLER							
TOTAL SPRINKLERS							
TOTAL THIS SHEET	-0-	TOTAL THIS JOB	986				
APPROVAL AGENCY	STATE FIRE MARSHAL I.S.D.						
DRAWN BY	DATE	SCALE	JOB NO	DWG. NO.			
TSF	11-15-82	AS NOTED	4805 b	1 of 7			

MARBAUGH—1000-H