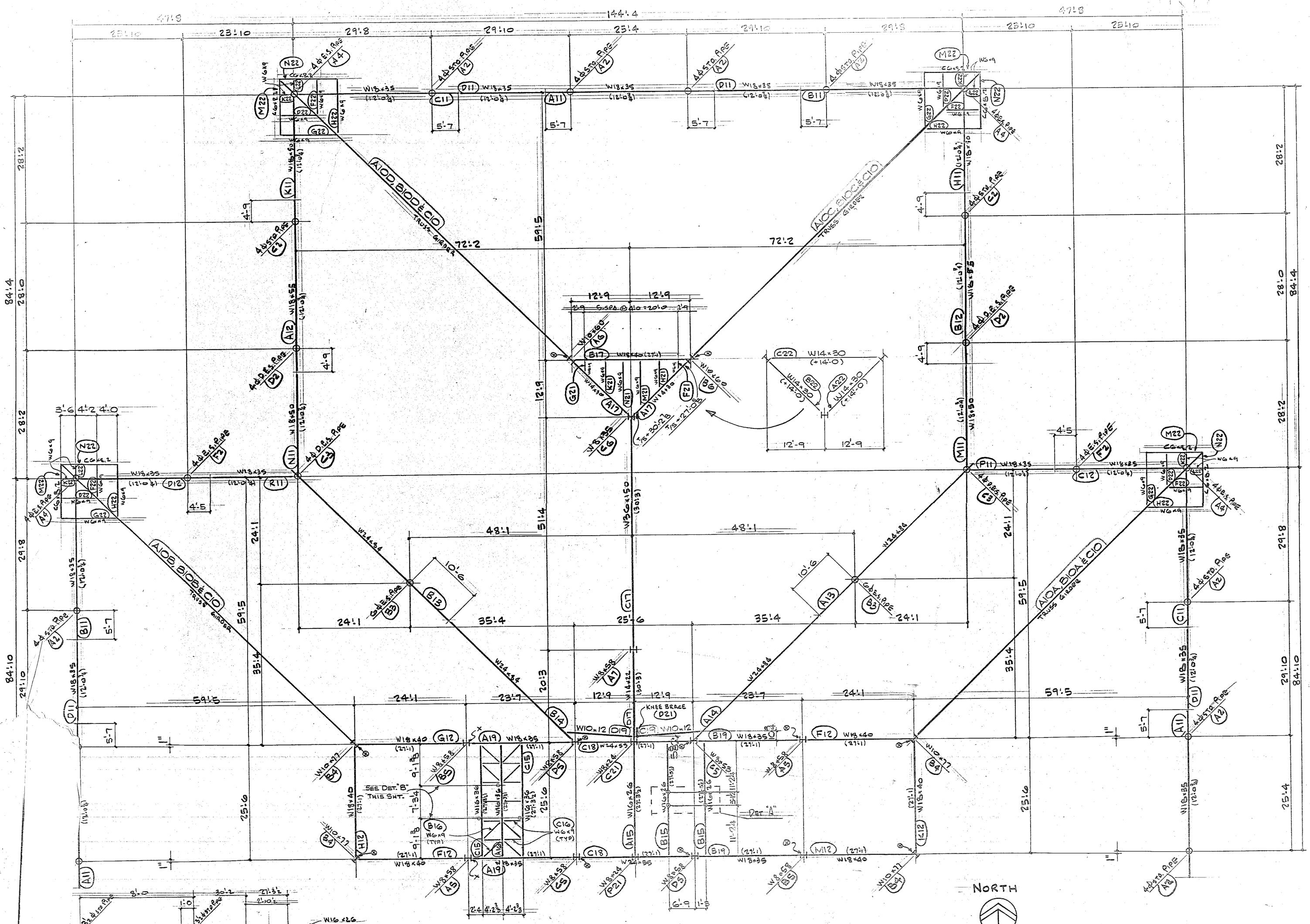

UNIT "A" ROOF FRAMING PLAN

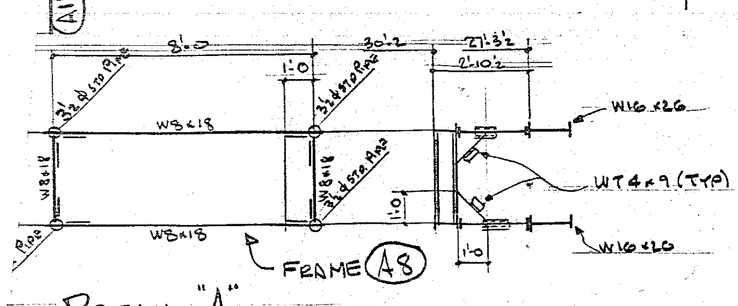

DETAIL "A"

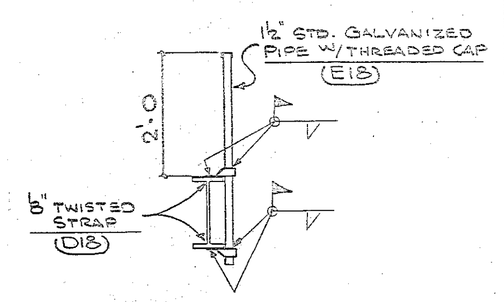

DETAIL "B"

APPROVED
EVERETT I. BROWN CO.
SEE SHT. # FOR ROOF FRAMES
BY
DATE MAR 21 '83

APPROVED DRAWINGS FOR FIELD USE
DATE MAR 9 1983

ISSUE	#BP	FOR	DATE	BY
1	3	BEL	APP	11-3	SS
2	4	FRD	8-[illegible]	

REV	DATE	DESCRIPTION	MADE BY
1	11/[illegible]	APPROVAL	SS

INTERSTATE WELDING & FABRICATION, INC.
1670 DAVIS AVENUE • TERRE HAUTE, INDIANA 47802

HOLES
PAINT
CLEAN'G.
REF. DWG'S.

JACKSON ELEMENTARY SCHOOL
CHESTERTON, IN.

CONT.

DWN. BY
CHK'D. BY
JOB #
DATE

63-6-01