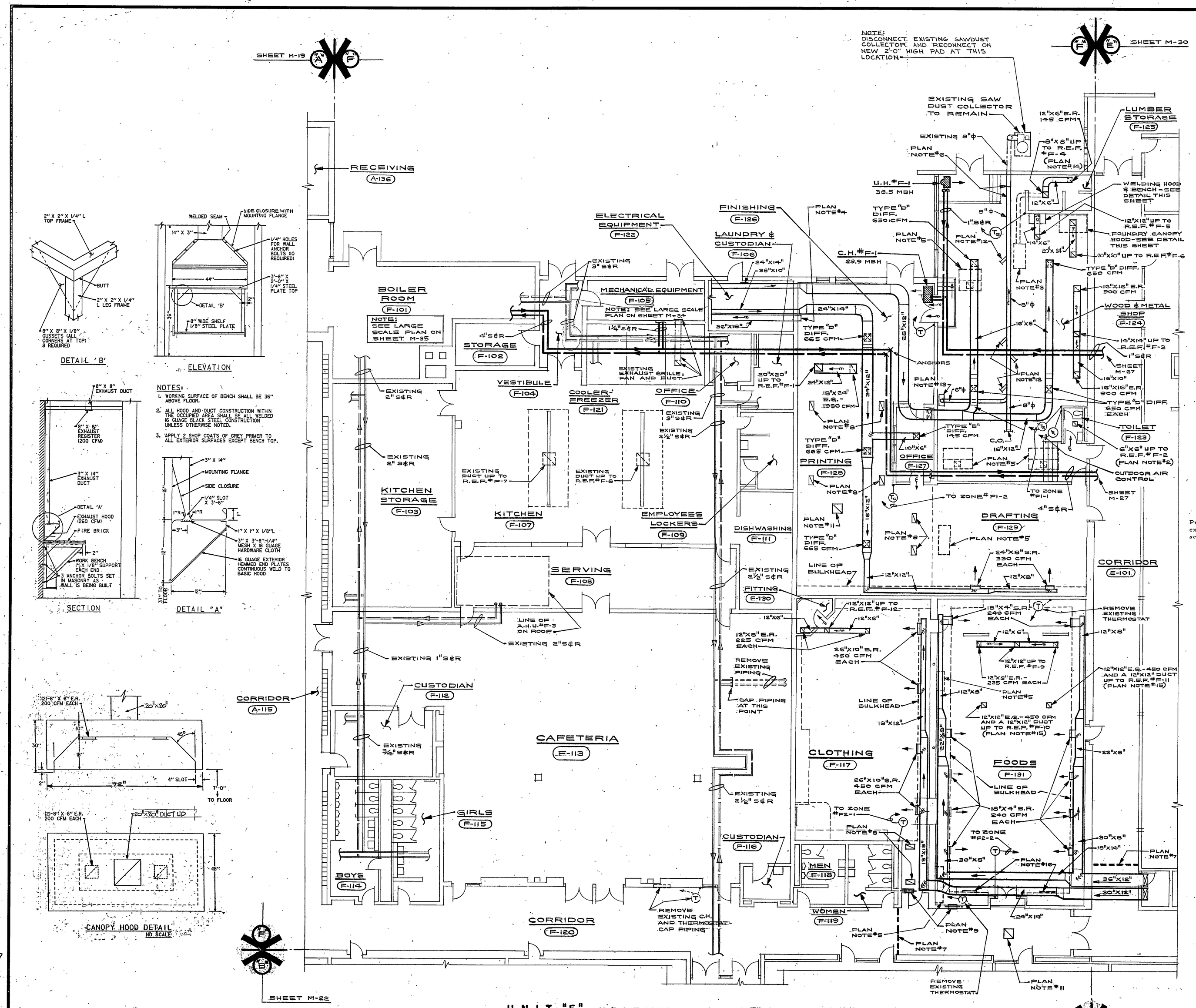

UNIT "F" HEATING, VENTILATING & AIR CONDITIONING FIRST FLOOR PLAN

SCALE: 1/8" = 1'-0"

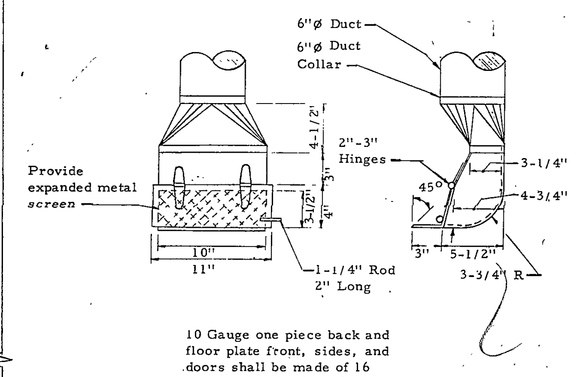

FLOOR SWEEP DETAIL
NO SCALE

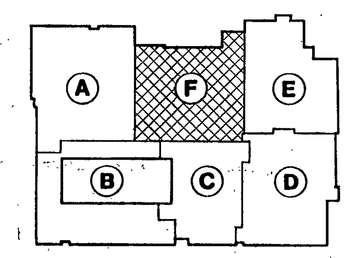

KEY PLAN
NO SCALE

AS-BUILT
25 SEPT. 1984

PLAN NOTES

1. SEE SHEET M-3 FOR GENERAL NOTES, AND LEGENDS.
2. REMOVE EXISTING GRILLE, DUCT AND EXHAUST FAN. INSTALL NEW 6"X6" GRILLE AND DUCT IN EXISTING OPENING AND A NEW FAN ON EXISTING ROOF CURB.
3. REMOVE EXISTING WELDING HOOD AND DUCTWORK.
4. STUB DUCT INTO SPACE ABOVE CEILING.
5. REMOVE EXISTING CLASSROOM UNIT VENTILATOR.
6. CONNECT NEW 8"ϕ DUCT TO EXISTING 8"ϕ DUCT AT THIS POINT.
7. ZONE BARRIER BY GENERAL CONTRACTOR.
8. 24"X12" R.A.G. IN CEILING.
9. 24"X12" OPENING IN WALL ABOVE CEILING BY GENERAL CONTRACTOR, INSTALL FIRE DAMPER IN OPENING.
10. SEE SHEET M-16 FOR SCHEDULES.
11. 24"X24" OPENING IN ROOF UP TO 24"ϕ RELIEF VENT.
12. 4" CAPPED OUTLET.
13. FLOOR SWEEP - SEE DETAIL THIS SHEET.
14. LOCATE EXHAUST FAN ABOVE EXISTING ROOF OPENING.
15. RUN 12" X 12" UP THRU EXISTING OPENING IN ROOF.
16. 36" X 6" RETURN AIR GRILLE IN FACE OF BULKHEAD.

EVERETT · I · BROWN COMPANY

ARCHITECTS ENGINEERS

• INDIANAPOLIS, INDIANA • 46241

©EVERETT I. BROWN COMPANY

5500 WEST BRADBURY AVENUE •

• PARK FLETCHER •

ADDITION TO AND RENOVATION OF LIBERTY MIDDLE SCHOOL

James A. Partridge

JAMES ALLEN PARTRIDGE REGISTERED 12545 STATE OF INDIANA PROFESSIONAL ENGINEER

PROJECT	DATE	REVISED
12579.00	MAY 3, 1982	

NO. M-30
OF 36

R 27

92-M-17