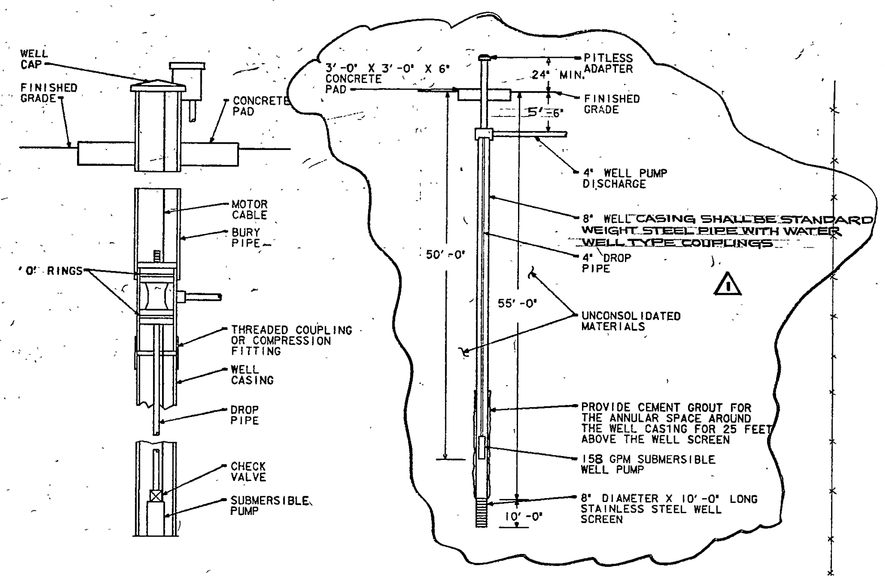

SECTION THRU PITLESS ADAPTER AND WATER WELL
NO SCALE

DETAIL OF TYPICAL OUTSIDE CLEANOUT
NO SCALE

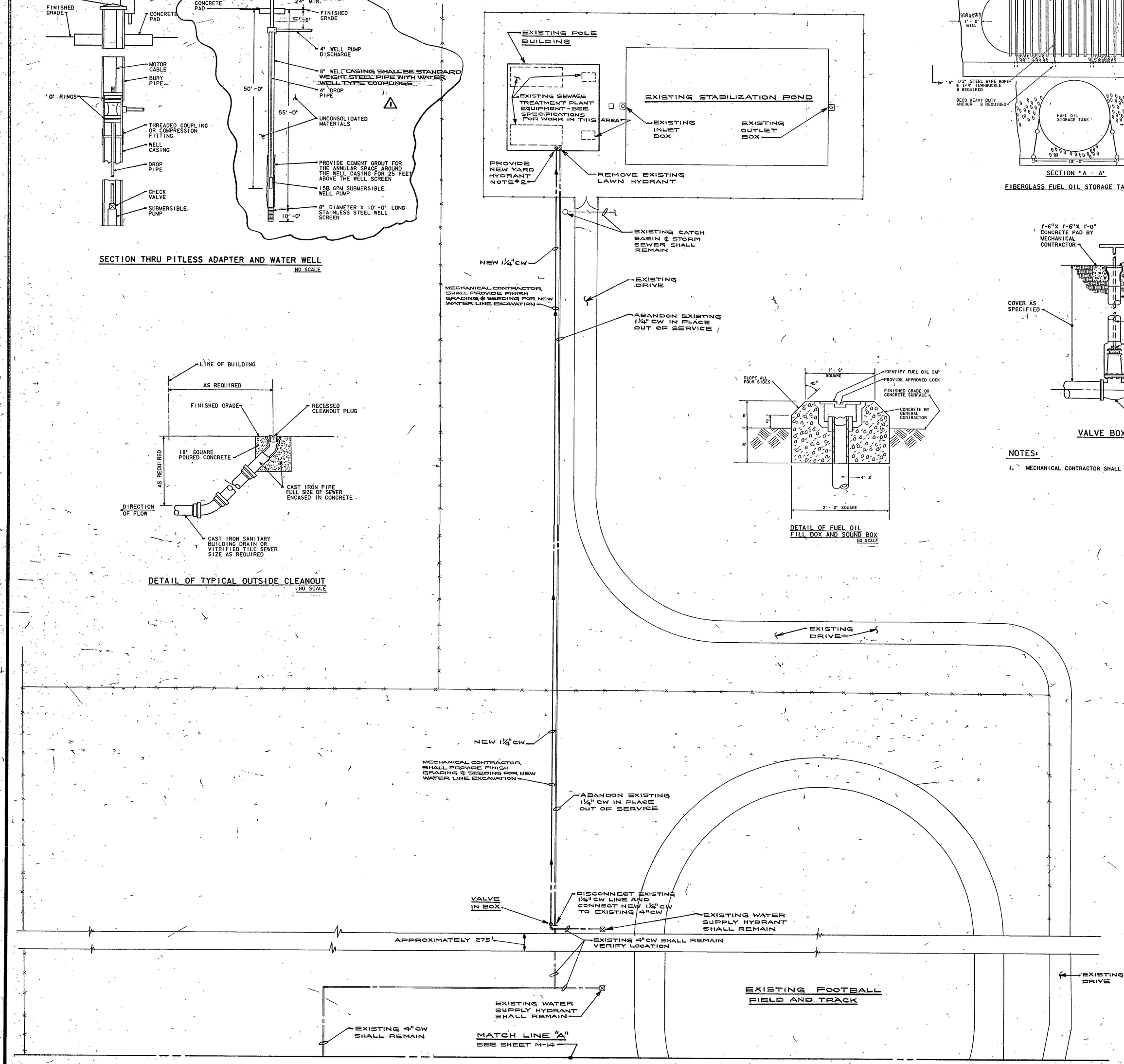

MECHANICAL SITE PLAN
SCALE: 1" = 30'-0"

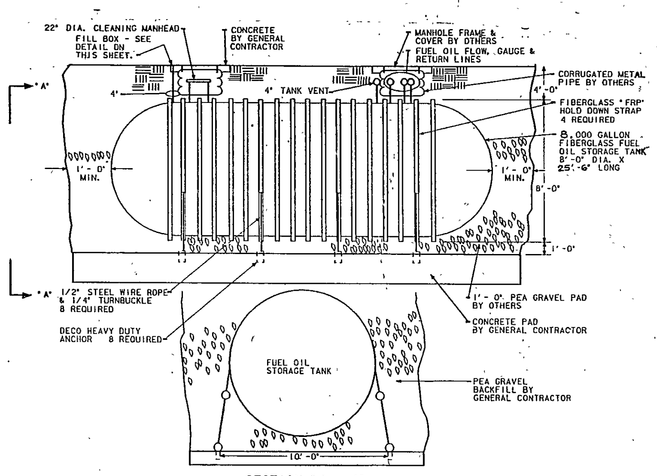

SECTION "A - A"
FIBERGLASS FUEL OIL STORAGE TANK DETAIL
NO SCALE

DETAIL OF FUEL OIL FILL BOX AND SOUND BOX
NO SCALE

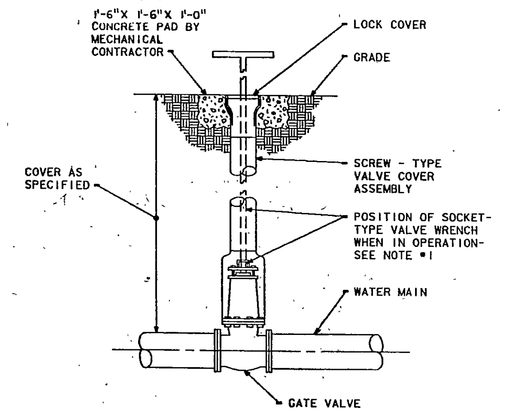

VALVE BOX DETAIL
NO SCALE

NOTES:

1. MECHANICAL CONTRACTOR SHALL PROVIDE ONE SOCKET-TYPE VALVE WRENCH.

PLAN NOTES

1. SEE SHEET M-3 FOR GENERAL MECHANICAL NOTES, LEGEND AND SCHEDULES.
2. YARD HYDRANT SHALL BE WOODFORD "IOWA" MODEL #Y1 FREEZEPROOF POST HYDRANT WITH 1" INLET OR AN APPROVED EQUAL. PROVIDE 3 CUBIC FEET OF GRAVEL AROUND HYDRANT VALVE BODY.
3. WHERE NEW PIPING IS RUN BELOW EXISTING PAVED OR CONCRETE SURFACES, WORK SHALL BE PERFORMED AS SHOWN IN "DETAIL SHOWING CUTS IN EXISTING FINISHED SURFACES" ON SHEET M-20.

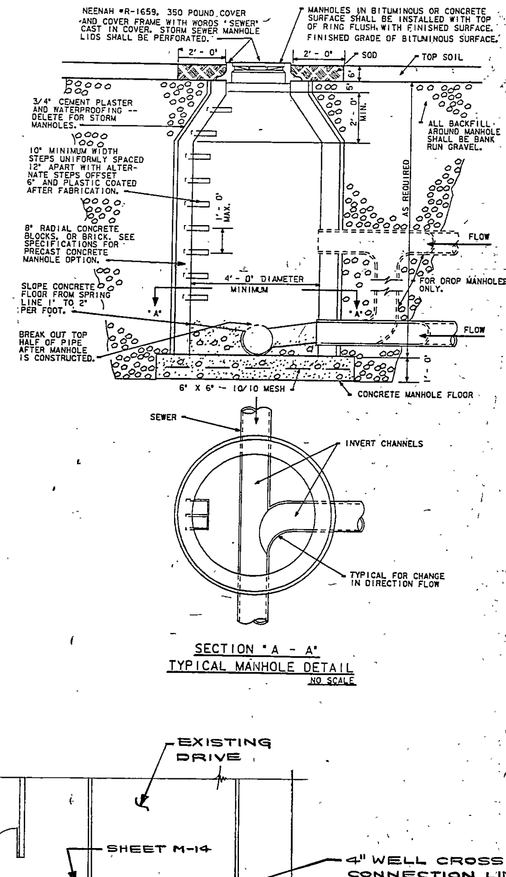

SECTION "A - A"
TYPICAL MANHOLE DETAIL
NO SCALE

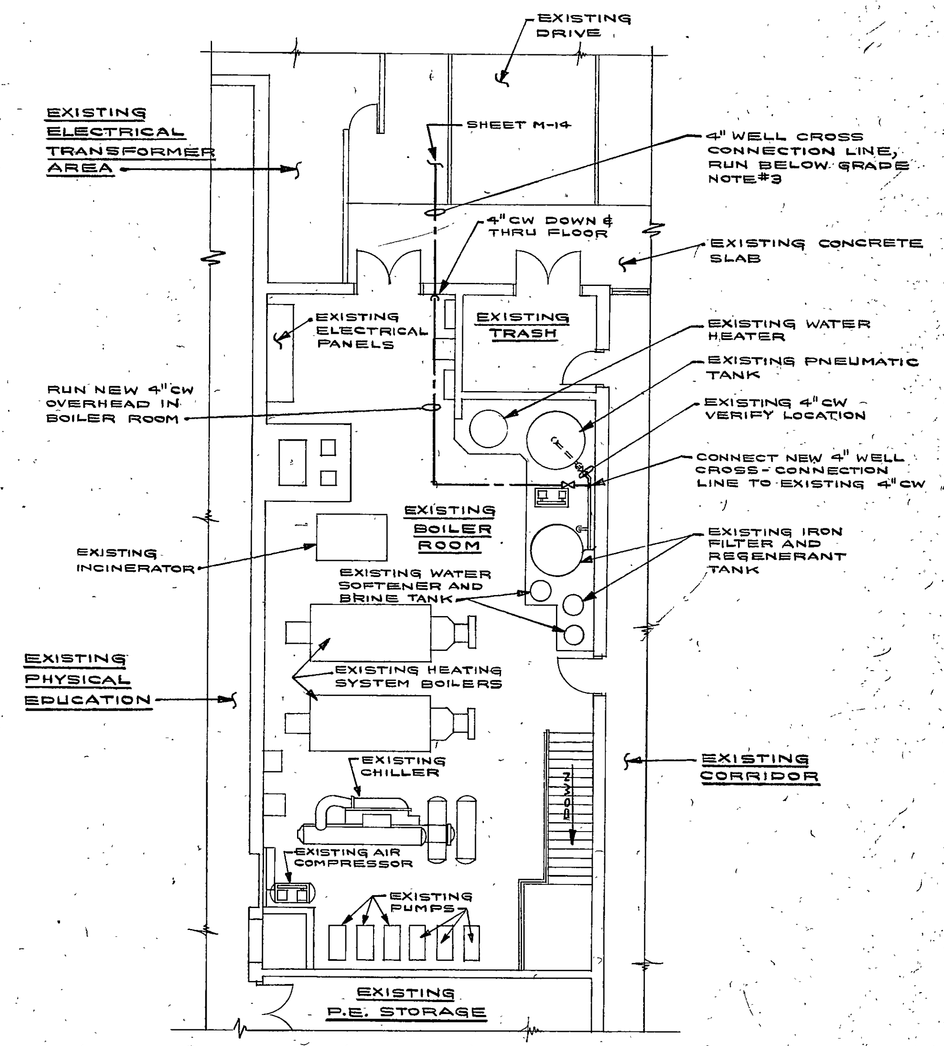

EXISTING LIBERTY ELEMENTARY SCHOOL
BOILER ROOM LAYOUT
SCALE: 1/8" = 1'-0"
NORTH

AS-BUILT
25 SEPT 1984
REVISION RM-1

EVERETT · I · BROWN COMPANY
ARCHITECTS ENGINEERS
• PARK FLETCHER •
• INDIANAPOLIS, INDIANA • 46241

© EVERETT I. BROWN COMPANY

5500 WEST BRADBURY AVENUE •
ADDITION TO AND RENOVATION OF LIBERTY MIDDLE SCHOOL

James A. Partridge

JAMES ALLEN PARTRIDGE REGISTERED PROFESSIONAL ENGINEER 12545 STATE OF INDIANA

PROJECT	DATE	REVISED
12579.00	MAY 3, 1982	JULY 23, 1982

NO. M-15
OF 36

82-M-02

R-27