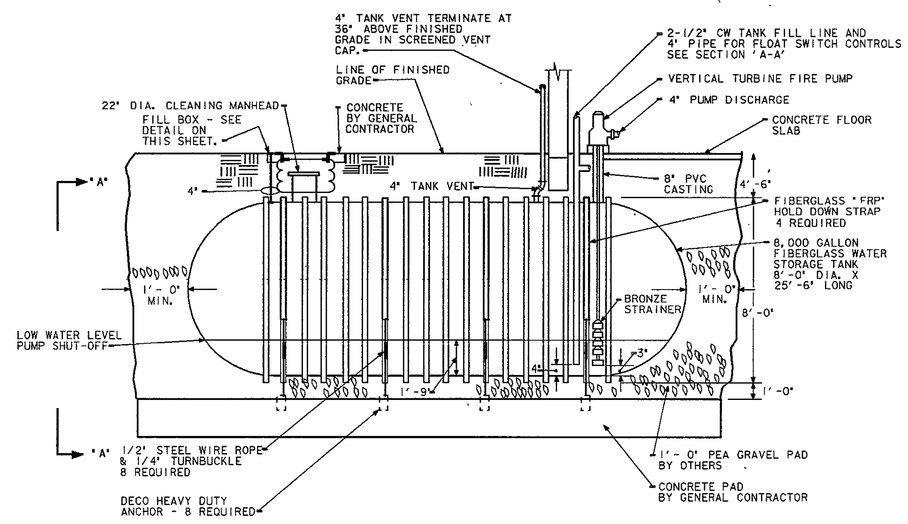

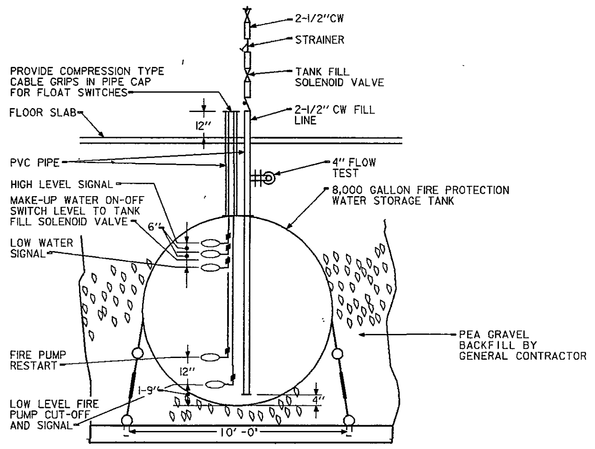

SECTION "A - A"

FIRE PROTECTION WATER STORAGE TANK DETAIL

NO SCALE

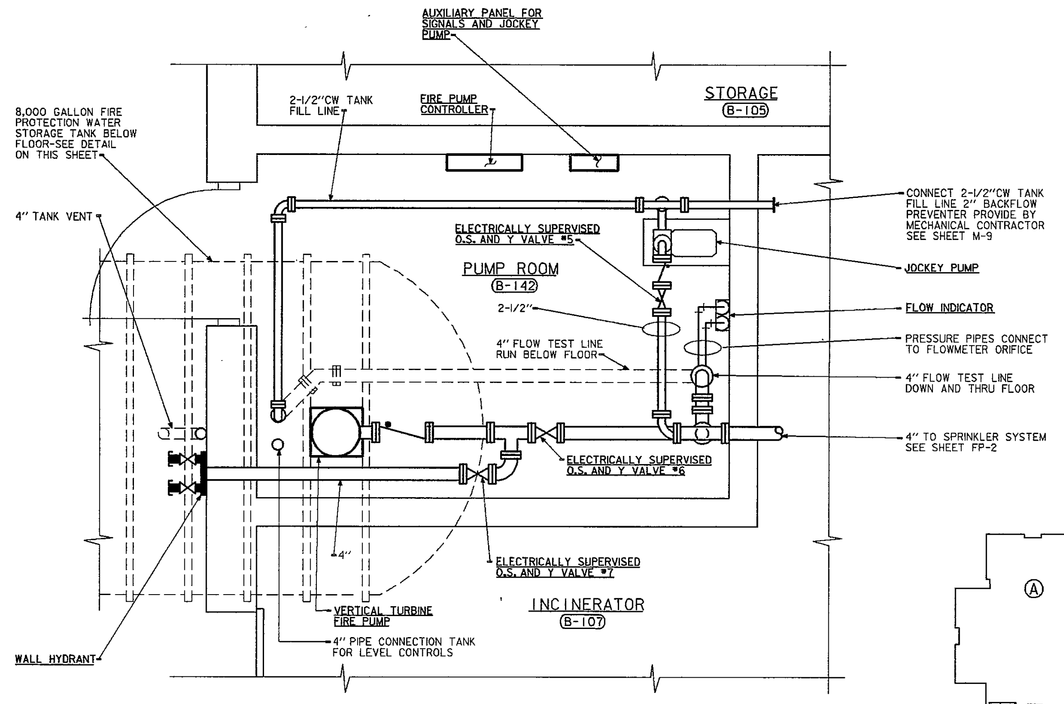

AUTOMATIC FIRE SPRINKLER SYSTEM PUMP ROOM LAYOUT

SCALE: 1/2" = 1'-0"

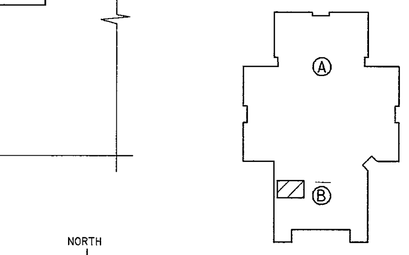

KEY PLAN

NO SCALE

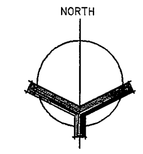

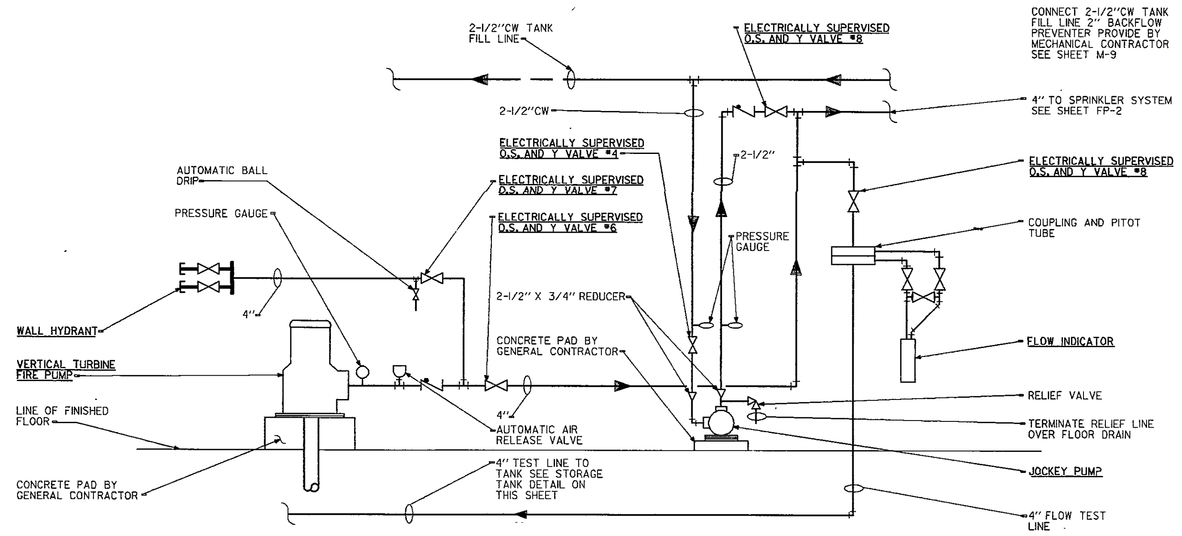

AUTOMATIC FIRE PUMP PIPING DIAGRAM

NO SCALE

PLAN NOTES

1. SEE SHEET M-3 FOR GENERAL NOTES, LEGEND AND SCHEDULES.
2. TYPE 'A' AUTOMATIC FIRE SPRINKLERS SHALL BE STAR SPRINKLER CORPORATION CEILING PATTERN MODEL E FLUSH TYPE 1/2" ORIFICE, 165°, CHROME PLATED SPRINKLER OR AN APPROVED EQUAL.
3. TYPE 'B' AUTOMATIC FIRE SPRINKLERS SHALL BE STAR SPRINKLER CORPORATION MODEL E UPRIGHT TYPE 1/2" ORIFICE, 212°, BRONZE SPRINKLER OR AN APPROVED EQUAL.
4. TYPE 'C' AUTOMATIC FIRE SPRINKLERS SHALL BE STAR SPRINKLER CORPORATION MODEL E SIDEWALL TYPE 1/2" ORIFICE, 165°, CHROME PLATED SPRINKLER OR AN APPROVED EQUAL.
5. FIRE PROTECTION CONTRACTOR SHALL ADJUST ALL SPRINKLER HAEDS TO MISS MECHANICAL EQUIPMENT AND DUCTWORK AND PROVIDE ADDITIONAL SPRINKLER HEADS AS REQUIRED.

FIRE SPRINKLER CALCULATIONS

DESIGN DATA:

1. OCCUPANCY CLASSIFICATION: LIGHT HAZARD
2. TOTAL WATER REQUIRED = 250 GPM
3. WATER STORAGE REQUIRED = 250 GPM FOR 30 MINUTES = 7500 GALS.
4. FIRE PUMP SIZE REQUIRED:
   PRESSURE REQUIRED AT HIGHEST SPRINKLER = 15 PSI
   ELEVATION OF HIGHEST SPRINKLER = 896.00'
   STORAGE TANK LOW WATER ELEVATION = 857.50'
   ELEVATION DIFFERENCE = 38.50'
   STATIC HEAD IN PSI= 38.50' X .433 = 16.67 PSI
   TOTAL DISCHARGE HEAD REQUIRED = 31.67 PSI
   PUMP REQUIRED TO PUMP 250 GPM AT = 31.67 PSI

FIRE SPRINKLER SYSTEM PUMP ROOM EQUIPMENT SCHEDULE

1. FIRE PUMP, JOCKEY PUMP AND CONTROLS:
   FIRE PUMP SHALL BE PEERLESS PUMP COMPANY, U.L. LISTED VERTICAL TURBINE TYPE, MODEL #8MA-F, 4 STAGE PUMP WITH BRONZE STRAINER HAVING THE CAPACITY TO PUMP 250 GPM AT 40 PSI OR AN APPROVED EQUAL. MOTOR DATA: 7-1/2 H.P., 460 VOLT, 3 PHASE, 60 HERTZ, 1750 RPM.
   JOCKEY PUMP SHALL BE WEBTROL MODEL #58512, OR AN APPROVED EQUAL, HAVING THE CAPACITY TO PUMP 5 GPM AT 105 PSI. MOTOR DATA: 1/2 H.P., 115 VOLT, 1PHASE, 60 HERTZ, 3450 RPM.
   PROVIDE LIMITED SERVICE, U.L. LISTED FIRE PUMP CONTROLLER AND AN AUXILIARY PANEL FOR SIGNALS AND JOCKEY PUMP CONTROL CONTAINING THE FOLLOWING CONTROLS AND FUNCTIONS:
   (1) HIGH LEVEL SIGNAL (LIGHT & SIGNAL)
   (2) MAKE-UP WATER ON (LIGHT)
   (3) LOW WATER LEVEL SIGNAL (LIGHT & SIGNAL)
   (4) LOW LEVEL FIRE PUMP CUT-OFF AND SIGNAL (LIGHT & SIGNAL)
   (5) FIRE PUMP POWER FAILURE SIGNAL (LIGHT & SIGNAL)
   (6) FIRE PUMP RUNNING SIGNAL (LIGHT & SIGNAL)
   (7) JOCKEY PUMP ON (LIGHT)
   (8) PANEL SHALL BE PROVIDED WITH FUSIABLE DISCONNECT SWITCH AND DRY CONTACT FOR REMOTE ALARM SIGNAL AND SHALL INCLUDE JOCKEY PUMP CONTROL.

   FLOAT SWITCHES SHALL BE COMPRISED OF A MERCURY SWITCH SEALED IN A DOUBLE WALL PLASTIC FLOAT PROVIDED WITH WEIGHTS ATTACHED TO THE CABLE FOR SUSPENDED OPERATION. SWITCHES SHALL BE PROVIDED WITH COMPRESSION TYPE CABLE GRIPS FOR FLOAT LEVEL ADJUSTMENT AND SHALL BE SUITABLE FOR 115 VOLT, 1PHASE OPERATION.
   A PROPERLY SIZED AUTOMATIC TRANSFER SWITCH SHALL BE PROVIDED FOR EMERGENCY POWER OPERATION. ALL CONTROLS, PANELS, PUMPS, MOTORS, AUTOMATIC TRANSFER SWITCH, ETC. SHALL MEET THE REQUIREMENTS OF THE LATEST ISSUE OF NFPA #13, NFPA #20 ANY ADDITIONAL NFPA STANDARDS WHICH MAY APPLY.

2. TANK FILL SOLENOID VALVE:

   ASCO MODEL #8210D49, SIZE 2-1/2" FOR NORMALLY CLOSED OPERATION OR AN APPROVED EQUAL. SOLENOID VALVE SHALL BE PROVIDED FOR 120 VOLT OPERATION. VALVE SHALL PROVIDE 75 GPM MAXIMUM FLOW.

3. WALL HYDRANT:

   ELKHART BRASS MANUFACTURING COMPANY MODEL #163 CHROME PLATED BRASS FLUSH TYPE WALL HYDRANT CONNECTION LESS MALE OUTLETS. WALL HYDRANT SHALL BE PROVIDED WITH ELKHART MODEL #88 2-1/2" CHROME PLATED HOSE GATE VALVES WITH CAPS AND CHAINS. VALVE OUTLETS SHALL HAVE MALE HOSE THREADS OF THE TYPE REQUIRED BY THE LOCAL FIRE DEPARTMENT.

4. FLOWMETER:

   PEERLESS TYPE ANR 73 'EAGLE EYE' PITOT TUBE TYPE. FLOWMETER SHALL BE RATED FOR 250 GPM OPERATION.

SPRINKLER SCHEDULE

TYPE	STAR MODEL (1/2" ORIFICE)	LOCATION	TEMPERATURE RATING
'A'	MODEL 'E' CHROME PLATED FLUSH PENDENT	IN FINISHED AREAS WITH CEILING	165°F
'B'	MODEL 'E' BRONZE UPRIGHT	IN UNFINISHED AREAS WITHOUT CEILINGS WHERE SHOWNS	165°F (NOTE #1)
'C'	MODEL 'E' CHROME PLATED FLUSH SIDEWALL	IN FINISHED AREAS WITHOUT CEILINGS	165°F
'D'	MODEL 'E' BRONZE PENDENT	IN FINISHED AREAS WITHOUT CEILINGS	165°F
'E'	MODEL 'E' CHROME PLATED PENDENT-NOTE #2	GYMNASIUM, WRESTLING AND WEIGHTS, ROOM AT LIBERTY MIDDLE SCHOOL	165°F

NOTES:

1. TEMPERATURE FOR SPRINKLER IN BOILER ROOMS AND INCINERATOR ROOMS SHALL BE 212°F.
2. SEE DETAIL ON SHEET FP-10 FOR INSTALLATION OF TYPE 'E' SPRINKLERS HEADS IN THE GYMNASIUM, WRESTING AND WEIGHTS ROOM AT LIBERTY MIDDLE SCHOOL.

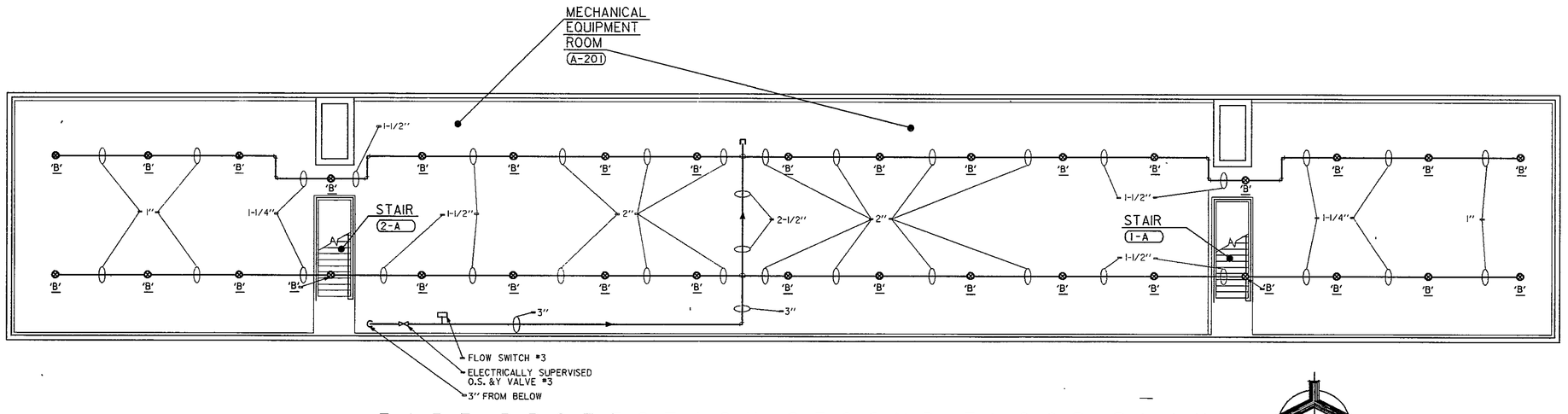

FIRE PROTECTION SECOND FLOOR PLAN

SCALE: 1/8" = 1'-0"

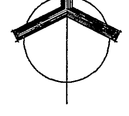

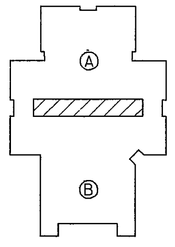

KEY PLAN

NO SCALE

EVERETT · I · BROWN COMPANY
ARCHITECTS ENGINEERS
• PARK FLETCHER • INDIANAPOLIS, INDIANA • 46241

EVERETT
5500 WEST BRADBURY AVENUE •
JACKSON ELEMENTARY SCHOOL

James A. Partridge
JAMES ALLEN PARTRIDGE REGISTERED 12345 STATE OF INDIANA PROFESSIONAL ENGINEER

PROJECT	DATE	REVISED
12579.00	MAY 3, 1982	

NO. FP-3
OF 10

© EVERETT I. BROWN COMPANY