INCANDESCENT FIXTURE SCHEDULE

TYPE	MANUFACTURER'S CATALOG NUMBER		MOUNT	LAMPS	REMARKS
MK-1	GUTH MARCO	PSI-2410OF-41CT32 LS616844-03-06	RECESS	1/70	HIGH PRESSURE SODIUM LAMP WEATHERPROOF, TEMPERPROOF 277 VOLT BALLAST
MK-2	INDY	3212G	SURFACE	2/20	SINGLE FACE EXIT LIGHT ARROWS AS INDICATED ON DRAWINGS 277 VOLT
MK-3	INDY	3212G	SURFACE	2/20	DOUBLE FACE EXIT LIGHT ARROWS AS INDICATED ON DRAWINGS 277 VOLT
MK-4	INDY	3212G-SPECIAL LETTERING	SURFACE	2/20	SPECIAL LETTERING "TO EXIT" 277 VOLT
MK-5	HALO	L700MB-L280MB	TRACK	1/150	R40 FLOOD MOUNTED ON CEILING MOUNTED LIGHTING TRACK
MK-6	DEVINE	B300-GB	WALL	1/200	WITH CAST GUARD
MK-7	PASS & SEYMOUR	44	SURFACE		PORCELAIN WITH MC GILL 2200 WIRE GUARD
MK-8	INDY	3212G	WALL	2/20	SINGLE FACE EXIT LIGHT ARROWS AS INDICATED ON DRAWINGS 120 VOLT
MK-9	MARCO	B-101	WALL	2/60	WITH WALNUT TRIM
MK-10	MARCO	S3-T357	RECESS	1/200	WITH TOUCH LATCH FRAME
MK-11	MARCO	SP9-12	SURFACE	1/200	
MK-12	HALO	L700MB-L280MB	TRACK	1/300	R40 FLOOD MOUNTED ON CEILING MOUNTED LIGHTING TRACK
MK-13	DUAL LITE		WALL		EMERGENCY BATTERY UNIT
MK-14	DEVINE	B317-GB	WALL	1/70	HIGH PRESSURE SODIUM LAMP WITH CAST GUARD
MK-15	INDY	3212G	WALL	2/20	SINGLE FACE EXIT LIGHT ARROWS AS INDICATED ON DRAWINGS 277 VOLT

MOTOR STARTER SCHEDULE

MARK	ITEM	SPEED	NEMA SIZE	HP	AUXILIARY CONTACTS N.O.	AUXILIARY CONTACTS N.C.	ROOM NUMBER	CONTROL ENCL.	CONTROL REMOTE
MMSA-1	SHOP AREA AIR COMPRESSOR	1	1	5	1	-	A-135	S	-
MMSA-2	INCINERATOR	1	0	1 1/2	1	-	A-137	S	-
MMSF-1	REF F-6	1	0	3/4	1	-	F-124	S	-

NOTES:
1. ALL MOTOR STARTERS SHALL BE 3-POLE COMBINATION TYPE WITH NEMA I ENCLOSURE UNLESS OTHERWISE NOTED.
2. ALL MOTOR STARTERS SHALL HAVE 480/120 VOLT CONTROL CIRCUIT TRANSFORMER WITH CONTROL CIRCUIT FUSES, UNLESS OTHERWISE NOTED.
3. ALL MOTOR STARTERS SHALL HAVE 120 VOLT COIL AND 480 VOLT CONTACTS, UNLESS OTHERWISE NOTED.
4. 120 VOLT MOMENTARY CONTACT PUSH BUTTON: P-ON-OFF; P2-HI-LOW; T-TEST BUTTON; T2-HI-LOW TEST BUTTON; PO2-HI-LOW OFF.
5. 120 VOLT MAINTAINED CONTACT SELECTOR SWITCH: S-ON-OFF; S2-HI-LOW; SO2-HI-LOW-OFF; SA-HAND-OFF-AUTOMATIC.
6. PILOT LIGHTS SHALL BE FURNISHED WITH ALL REMOTE CONTROL UNITS.

FLOOR OUTLET SCHEDULE

TYPE	DESCRIPTION	REMARKS
A	LEW 632SB-DFB-NS	WITH DUPLEX RECEPTACLE
B	LEW 532SB-BE-NS	WITH TELEPHONE JACK ADAPTER
C	LEW 532SB-BE-NS	WITH MICROPHONE JACK
D	LEW 632SB-DFB-NS	LESS DUPLEX RECEPTACLE (FOR TELEVISION)

NOTES:
1. VERIFY EXACT LOCATION OF ALL FLOOR OUTLETS WITH ARCHITECTS.
2. FURNISH AND INSTALL LEW DCF-1-NS CARPET FLANGES WHERE REQUIRED.

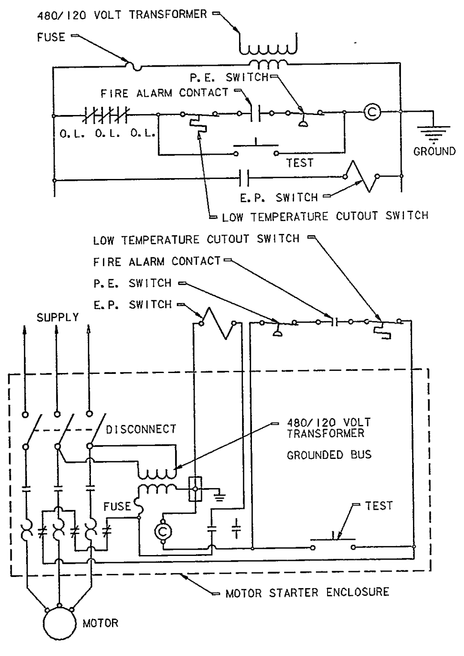

SINGLE SPEED AIR HANDLING UNIT WIRING DIAGRAM

NO SCALE

FLUORESCENT FIXTURE SCHEDULE

TYPE	MANUFACTURER'S CATALOG NUMBER		MOUNT	LAMPS	REMARKS
MF-1	DAYBRITE GUTH INDY	SG142-SRA6245 FSI-1424G-1HO2 512-TB-65B-142	RECESS	2/35	FLANGELESS CHASSIS FRAMED HOLOPHANE 6245 LENS 277 VOLT BALLAST
MF-2	DAYBRITE GUTH INDY	SG244-SRA6245 FSI-2444G-1HO2 512-TB-65B-244	RECESS	4/35	FLANGELESS CHASSIS FRAMED HOLOPHANE 6245 LENS 277 VOLT BALLAST
MF-3	LITE CONTROL MORRIS KURTZON	EW-2024RS-35T V-7872-4	RECESS	2/35	277 VOLT BALLAST
MF-4	DAYBRITE WESTINGHOUSE	R41252-4 H240RV	PENDANT	2/35	ROD PENDANT MOUNT 30" X 30" METAL LOUVERS 277 VOLT BALLAST
MF-5	GLOBE GUTH	OYE-6951-4R FSI-X414F-1HO2	RECESS	1/35	FLANGED CHASSIS FRAMED HOLOPHANE 6245 LENS 277 VOLT BALLAST
MF-6	EXISTING RELOCATED LIGHT FIXTURE		SURFACE	2/35	
MF-7	EXISTING RELOCATED LIGHT FIXTURE		RECESS	4/35	
MF-8	DAYBRITE INDY	1X4-7M3 612-65B-142	RECESS	2/35	SURFACE MOUNTED ON PENDANT MOUNTED UNISTRUT FRAMED HOLOPHANE 6245 LENS 277 VOLT BALLAST
MF-9	DAYBRITE INDY	1X4-7M3 612-65B-142	SURFACE	2/35	FRAMED HOLOPHANE 6245 LENS 120 VOLT BALLAST
MF-10	LITE CONTROL MORRIS KURTZON	EW-2024RS-36T V-7872-4	RECESS	2/35	120 VOLT BALLAST
MF-11	DAYBRITE WESTINGHOUSE	R41252-4 H240RV	PENDANT	2/35	CHAIN PENDANT MOUNT 30" X 30" METAL LOUVERS 277 VOLT BALLAST
MF-12	ALKCO	T-701-	RECESS	2/20	
MF-13	DAYBRITE WESTINGHOUSE	R41252-4 H240RV	SURFACE	2/35	30" X 30" METAL LOUVERS 277 VOLT BALLAST
MF-14	WESTINGHOUSE	SP240R	WALL	2/35	WITH WIRE GROUND 277 VOLT BALLAST
MF-15	DAYBRITE INDY	1X4-7M3 612-65B-142	PENDANT	2/35	ROD PENDANT MOUNT FRAMED HOLOPHANE 6245 LENS 277 VOLT BALLAST
MF-16	DAYBRITE GUTH INDY	SG142-SRA6245 FSI-1424G-1HO2 512-TB-65B-142	RECESS	2/35	FLANGELESS CHASSIS FRAMED HOLOPHANE 6245 LENS 120 VOLT BALLAST

AUTOMATIC EXHAUST FAN SCHEDULE

NUMBER ZONE	EXHAUST FAN NUMBER	POWER CIRCUIT	CONTROL TYPE	CONTROLLED BY	CONTROL DEVICE LOCATION	CONTROL DEVICE CONTROL CIRCUIT
1	REF A-8 REF A-9	L12-30 L12-30	I	CONTACTOR MCA-1 ALLEN BRADLEY #702-AA091	A-132	L12-30
	REF A-11	L13-5	I	CONTACTOR MCA-2 ALLEN BRADLEY #702-AA091	A-135	L13-5
2	REF B-1	L10-29	I	CONTACTOR MCB-1 ALLEN BRADLEY #702-AA091	B-122	L10-29
3	REF B-2 REF B-3	L10-31 L10-31	I	CONTACTOR MCB-2 ALLEN BRADLEY #702-AA091	B-122	L10-31
	REF C-1	L4-24	I	CONTACTOR MCC-1 ALLEN BRADLEY #702-AA091	C-122	L4-24
4	REF C-2 REF C-3 REF C-4	L4-26 L4-26 L4-26	I	CONTACTOR MCC-2 ALLEN BRADLEY #702-AA091	C-122	L4-26
5	REF D-1 REF D-2 REF D-5 REF D-6	L9-27 L9-27 L9-29 L9-29	I	CONTACTOR MCD-1 ALLEN BRADLEY #702-AA093	D-112	L9-29
6	REF D-7 REF D-8 REF D-9	L9-31 L9-31 L9-33	I	CONTACTOR MCD-2 ALLEN BRADLEY #702-AA093	D-112	L9-33
7	REF E-1 REF E-2 REF E-4 REF E-5 REF E-6 REF E-7 REF E-9	L7-11 L7-11 L7-11 L7-13 L7-13 L7-13 L7-13	I	CONTACTOR MCE-1 ALLEN BRADLEY #702-AA091	E-116	L7-11
	UEF E-3 UEF E-4	BRP-24 BRP-24	I	CONTACTOR MCE-4	EB-001	BRP-24
8	REF E-12	LP2-34	I	CONTACTOR MCE-2 ALLEN BRADLEY #702-AA091	E-108	LP2-34
10	REF F-2	LP1-32	I	CONTACTOR MCE-3 ALLEN BRADLEY #702-AA091	E-105	LP1-32

NOTES:
1. ALL CONTACTORS SHALL HAVE NEMA I ENCLOSURE WITH HAND-OFF-AUTOMATIC SELECTOR SWITCH AND FUSE PROTECTION FOR COIL CIRCUITS UNLESS OTHERWISE NOTED.
2. CONTACTORS SHALL BE ELECTRICALLY HELD.
3. CONTACTORS SHALL HAVE 120 VOLT COIL.
4. CONTACTORS SHALL HAVE NORMALLY OPEN CONTACTS.
5. CONTACTOR SHALL BE NEMA SIZE 0.
6. SEE TYPICAL AUTOMATIC EXHAUST FAN WIRING CONTROL DIAGRAM.

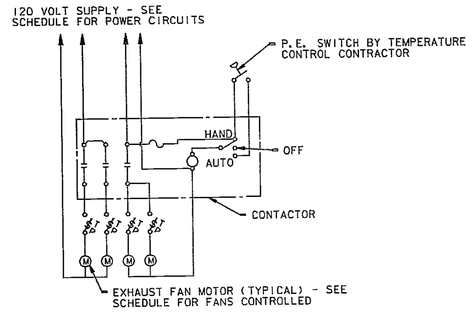

TYPE I

AUTOMATIC EXHAUST FAN CONTROL WIRING DIAGRAM

NO SCALE

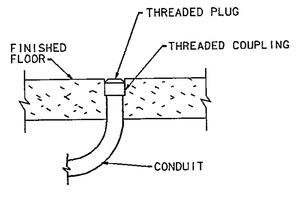

CONDUIT STUB UP DETAIL

NO SCALE

+ = STUB UP SYMBOL

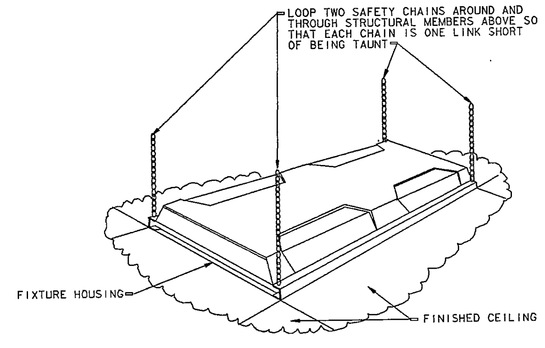

RECESSED FLUORESCENT FIXTURE MOUNTING DETAIL

NO SCALE

ELECTRICAL SYMBOL SCHEDULE

SYMBOL	DESCRIPTION	SYMBOL	DESCRIPTION
F-3	FLUORESCENT LIGHT FIXTURE F-3 INDICATES FIXTURE TYPE	C+C	CLOCK-DOUBLE FACE-SEE SPECIFICATIONS
F-3	FLUORESCENT LIGHT FIXTURE (EMERGENCY/WALK THRU/ SECURITY) F-3 INDICATES FIXTURE TYPE		BELL-CLASSROOM/CORRIDOR UNLESS OTHERWISE NOTED
K-3	INCANDESCENT/HIGH INTENSITY DISCHARGE LIGHT FIXTURE K-3 INDICATES FIXTURE TYPE		ELECTRICAL PANELBOARD
K-3	INCANDESCENT/HIGH INTENSITY DISCHARGE LIGHT FIXTURE (EMERGENCY/WALK THRU/SECURITY) K-3 INDICATES FIXTURE TYPE	J	JUNCTION BOX-WALL MOUNTED-ALLOW 4'-0" OF WIRE FOR CONNECTION
	EXIT LIGHT FIXTURE-CEILING MOUNTED-BAR INDICATES FACE	J	JUNCTION BOX-CEILING MOUNTED-ALLOW 4'-0" OF WIRE FOR CONNECTION
	EXIT LIGHT FIXTURE-CEILING MOUNTED-ARROW INDICATES FACE WITH DIRECTIONAL ARROW		CONDUIT STUB UP-COUPLING FLUSH WITH FINISHED FLOOR-SEE DETAIL
	EXIT LIGHT FIXTURE-WALL MOUNTED-BAR INDICATES FACE	M	MOTOR
	EXIT LIGHT FIXTURE-WALL MOUNTED-ARROW INDICATES FACE WITH DIRECTIONAL ARROW	S_{PM}	SPEAKER-PM INDICATES PROGRAM MONITOR
S_L	3 AMPERE RATED 25 VOLT SWITCH (LOW VOLTAGE SYSTEM)	S_{SC}	SPEAKER-SC INDICATES UNLIFTED CIRCUIT FROM MAIN SOUND CONSOLE
S_D	WALL DIMMER		LOUD SPEAKER-WALL MOUNTED
S	20 AMPERE RATED 120/277 VOLT SINGLE POLE SWITCH		HORN OR PROJECTOR SPEAKER
S^2	20 AMPERE RATED 120/277 VOLT TWO POLE SWITCH	S	SPEAKER-CEILING MOUNTED-RECESSED
S^3	20 AMPERE RATED 120/277 VOLT THREE WAY SWITCH		PUSH TO CALL SWITCH
S^4	20 AMPERE RATED 120/277 VOLT FOUR WAY SWITCH		MICROPHONE JACK
S^M	20 AMPERE RATED 120/277 VOLT MOMENTARY SWITCH		MICROPHONE FLOOR BOX-T-INDICATES TYPE-SEE FLOOR BOX SCHEDULE
S^K	KEY OPERATED SWITCH	V	VOLUME CONTROL
S^P	SWITCH WITH PILOT LIGHT		SPEAKER JACK (UNLIFTED)
S^T_P	MANUAL MOTOR STARTER WITH THERMAL OVERLOADS AND PILOT LIGHTS		SPEAKER JACK (LIFTED)
	COMBINATION MOTOR STARTER		BRIDGING JACK-600 OHMS
	MAGNETIC MOTOR STARTER		CUEING JACK
R	NONFUSED SAFETY SWITCH-R-INDICATES AMPERE RATING		PROJECTOR JACK
P	ON-OFF PUSH BUTTON OR SELECTOR SWITCH-P- INDICATES PILOT LIGHT		SOUND TERMINAL CABINET
P	HIGH-LOW-OFF PUSH BUTTON OR SELECTOR SWITCH-P-INDICATES PILOT LIGHT	F	FIRE ALARM MANUAL STATION
	RED MUSHROOM SHAPED PLUNGER PUSH BUTTON- USED FOR SHUNT TRIP		FIRE ALARM HORN AND VISUAL FIRE ALARM SIGNAL LIGHT
GFI	SPECIAL IRONING RECEPTACLE-PASS AND SCYMOUR 5351 (RECEPTACLE), 2242 GRY (SWITCH), 1775 GRY (PILOT LIGHT), 97002-EB (WALL PLATE) AND TWO GANG BOX	F	FIRE ALARM MANUAL STATION WITH HORN AND VISUAL FIRE ALARM SIGNAL LIGHT LOCATED ABOVE
	20 AMPERE RATED 3 WIRE 120 VOLT DUPLEX RECEPTACLE WITH GROUND	F_A	FIRE DETECTOR (THERMAL) -AREA-R- INDICATES TEMPERATURE SETTING
	15 AMPERE RATED 3 WIRE 120 VOLT DUPLEX RECEPTACLE WITH GROUND	F_D	FIRE DETECTOR (THERMAL) -DUCT- FURNISHED AND INSTALLED BY OTHERS
	15 AMPERE RATED 3 WIRE 120 VOLT DUPLEX RECEPTACLE WITH GROUND-HORIZONTAL MOUNTED	F_A	FIRE DETECTOR (SMOKE) -AREA-R- INDICATES TEMPERATURE SETTING
	15 AMP RATED 3 WIRE 120 VOLT DUPLEX RECEPTACLE WITH GROUND FURNISHED BY OTHERS, INSTALLED AND WIRED COMPLETE BY ELECTRICAL CONTRACTOR	F_D	FIRE DETECTOR (SMOKE) -DUCT-FURNISHED AND INSTALLED BY OTHERS
WC	15 AMPERE RATED 3 WIRE 120 VOLT DUPLEX RECEPTACLE CONCEALED BEHIND WATER COOLER-VERIFY EXACT HEIGHT AND LOCATION		FIRE ALARM FLOW SWITCH
	15 AMPERE RATED 5 WIRE SPLIT WIRED 120 VOLT DUPLEX RECEPTACLE WITH GROUND (CONSTANT AND CONTROLLED)	DH	DOOR HOLDER-FURNISHED AND INSTALLED BY OTHERS, WIRED COMPLETE BY ELECTRICAL CONTRACTOR
R	120/250 VOLT RATED 3 WIRE RECEPTACLE-R-INDICATES AMPERE RATING		SPRINKLER ZONE CONTROL VALVE
N R	250 VOLT RATED RECEPTACLE-N-INDICATES NUMBER OF POLES-R-INDICATES AMPERE RATING	M	CABINET HEATER/CLASSROOM UNIT VENTILATOR/FAN COIL/UNIT HEATER FURNISHED AND INSTALLED BY OTHERS+ WIRED COMPLETE BY ELECTRICAL CONTRACTOR
	SPECIAL RECEPTACLE-SEE FLOOR PLANS	CH	CABINET HEATER
	15 AMPERE RATED 3 WIRE 120 VOLT TWIST LOCK RECEPTACLE WITH GROUND-CEILING MOUNTED	CUV	CLASSROOM UNIT VENTILATOR
T	FLOOR BOX-T-INDICATES TYPE-SEE FLOOR BOX SCHEDULE	FC	FAN COIL
T	TELEPHONE FLOOR BOX-T-INDICATES TYPE-SEE FLOOR BOX SCHEDULE	UH	UNIT HEATER
	TELEPHONE RECEPTACLE	REF	ROOF EXHAUST FAN
	TELEPHONE TERMINAL BOARD	AHU	AIR HANDLING UNIT
	INTERCOMMUNICATION TELEPHONE	WP	WEATHERPROOF-SEE SPECIFICATIONS
T	HOMEBOUND TELEPHONE RECEPTACLE	EP	EXPLOSION PROOF-SEE SPECIFICATIONS
T	TELEVISION TAP OFF IN TWO GANG BOX WITH 15 AMPERE RATED 3 WIRE 120 VOLT DUPLEX RECEPTACLE WITH GROUND-SEE DETAIL	VP	VANDAL PROOF-SEE SPECIFICATIONS
T	TELEVISION INPUT JACK IN TWO GANG BOX	GFI	GROUND FAULT INTERRUPTER-ALL ELECTRICAL DEVICES ON CIRCUIT WHERE G.F.I. IS SHOWN SHALL BE GROUND FAULT PROTECTED (SEE SPECIFICATIONS
C	CLOCK-SINGLE FACE-SEE SPECIFICATIONS	SFS	SPRINKLER FLOW SWITCH
		SZCV	SPRINKLER ZONE CONTROL VALVE
		TCP	TEMPERATURE CONTROL PANEL

NOTE: NOT ALL SYMBOLS ARE USED ON THIS PROJECT.

GENERAL RENOVATION NOTES - APPLY TO ALL SHEETS

1. USE OF EXISTING CONDUIT IN PLACE IS PERMITTED WHERE SUCH USE IS WITHIN THE LIMITS OF THE NATIONAL ELECTRICAL CODE.
2. WHEN RECONNECTING EXISTING LIGHT FIXTURES OR NEWLY RE-PLACED CONVENIENCE RECEPTACLES TO NEW CIRCUITS, CONNECT APPROXIMATELY 1200 WATTS TO A LIGHTING CIRCUIT OR UP TO 5 RECEPTACLES TO A CONVENIENCE RECEPTACLE CIRCUIT. DO NOT CONNECT LIGHTS OR SMALL MOTORS ON THE SAME CIRCUIT WITH CONVENIENCE RECEPTACLES.
3. CONNECT MOTORS OR APPLIANCES AS SHOWN ON PLANS. ANY MIS-CELLANEOUS SMALL MOTORS OR APPLIANCES NOT SHOWN ON THE PLANS BUT EXISTING AND ARE TO REMAIN IN SERVICE ON THE JOB SITE SHALL BE RECONNECTED TO A NEW CIRCUIT WITH NEW WIRING FROM THE NEAREST AVAILABLE NEW OR EXISTING PANEL-BOARD FROM THE FLOOR SERVED.
4. NOT ALL EXISTING CONVENIENCE RECEPTACLES, WALL SWITCHES, ETC., AND OTHER ELECTRICAL EQUIPMENT ARE SHOWN ON THE PLANS. A SURVEY OF THE JOB SITE MUST BE MADE TO DETERMINE THE EXTENT OF EXISTING ELECTRICAL EQUIPMENT.
5. REMOVE ALL EXISTING INTERIOR AND EXTERIOR ELECTRICAL DEVISES, EQUIPMENT, WIRING, EXPOSED ABANDONED CONDUIT, ETC., NO LONGER REQUIRED UNLESS OTHERWISE NOTED.
6. REMOVE EXISTING LIGHT FIXTURES IN ROOMS WHERE NEW LIGHT FIXTURES ARE SHOWN. IN ALL OTHER ROOMS EXISTING LIGHT FIXTURES ARE TO REMAIN. RECONNECT EXISTING LIGHT FIX-TURES TO NEAREST AVAILABLE NEW OR EXISTING PANEL FROM THE FLOOR SERVED.
7. ALL DEFECTIVE EXISTING RECEPTACLES, SWITCHES, ETC., SHALL BE REPLACED WITH NEW DEVICES, IN AREAS OF THE BUILDING WHERE ELECTRICAL TRADES ARE PERFORMING WORK.
8. SEE ARCHITECTURAL PLANS FOR RENOVATED AREAS.
9. WHERE ALL NEW WALL FINISHES ARE TO BE PROVIDED, REMOVE ALL EXISTING ELECTRICAL DEVICES AND COVER PLATES, SUCH AS RECEPTACLES, SWITCHES, FIRE ALARM HORNS, PULL STATIONS, CLOCKS AND BELLS, ETC., AND REINSTALL AFTER NEW WALL FINISH IS COMPLETED.
10. SEE MECHANICAL DRAWINGS FOR MISCELLANEOUS MOTORS WHICH ARE TO BE REMOVED. THE ELECTRICAL CONTRACTOR SHALL DISCONNECT COMPLETE.

GENERAL NOTES-APPLY TO ALL SHEETS

1. VERIFY ALL DIMENSIONS FROM ARCHITECTURAL PLANS.
2. DIMENSIONS SHOWN ON OUTLET BOXES SHALL BE FROM THE FINISHED FLOOR TO THE TOP OF THE BOX.
3. THE ELECTRICAL CONTRACTOR SHALL CENTER CLOCKS ABOVE DOORS, CHALKBOARDS OR IN WALL SPACES ALIGNED WITH CEILING GRID AS DIRECTED BY THE ARCHITECT.
4. CONDUIT TO LIGHTS IS SHOWN TO INDICATE SWITCHING AND DOES NOT INDICATE QUANTITY OR EXACT LOCATION. OTHER CONDUIT SHOWN INDICATES CONNECTION, BUT DOES NOT INDICATE QUANTITY OR EXACT LOCATION.
5. FLUORESCENT FIXTURES SHALL BE SUPPORTED FROM STRUCTURE ABOVE-SEE DETAIL THIS SHEET.
6. FLUORESCENT FIXTURES INSTALLED IN ACOUSTICAL TILE SHALL BE ON ONE FOOT MODULES.
7. ALL FLUORESCENT FIXTURES MOUNTED INDEPENDENTLY SHALL BE FURNISHED WITH TWO END PLATES. FLUORESCENT FIXTURES MOUNTED IN A CONTINUOUS ROW SHALL BE FURNISHED WITH PROPER NUMBER OF CONNECTORS. END PLATES SHALL BE FUR-NISHED AT THE ENDS OF EACH ROW ONLY.
8. PLASTER FRAMES AND/OR RINGS SHALL BE PROVIDED WHERE REQUIRED BY CEILING CONSTRUCTION.
9. VERIFY LOCATION OF LIGHTS IN ROOMS CONTAINING EXPOSED DUCTWORK AND PIPING BY OTHER TRADES AND RELOCATE, IF NECESSARY, AS DIRECTED BY ARCHITECT.
10. VERIFY LOCATION OF MOTOR STARTERS, DISCONNECTS, PANELBOARDS, ETC., IN ROOMS CONTAINING EXPOSED DUCTWORK AND PIPING BY OTHER TRADES AND RELOCATE TO AN ADJACENT, UNOBSTRUCTED AREA AS DIRECTED BY ARCHITECT.
11. VERIFY HEIGHT AND LOCATION OF OUTLETS BEHIND WATER COOLERS WITH OTHER TRADES, SO THAT OUTLETS ARE CONCEALED.
12. SEE MECHANICAL PLANS FOR EXHAUST FAN SCHEDULE AND POWER CIRCUITS.
13. ALL FREE STANDING ITEMS OF ELECTRICAL EQUIPMENT SHALL BE INSTALLED ON FOUR INCH (4") CONCRETE PADS BY ELECTRICAL CONTRACTOR UNLESS NOTED TO BE FURNISHED BY OTHER TRADES.
14. VERIFY EXACT LOCATION OF ALL OUTLETS IN LABORATORY EQUIPMENT, AND BUILT-IN FURNITURE WITH EQUIPMENT SUPPLIERS ROUGH-IN DRAWINGS BEFORE ROUGHING IN.
15. SEE ARCHITECTURAL PLANS FOR NOTES REFERENCING ADDITIONAL ELECTRICAL WORK.

WREN COMPANY
ARCHITECTS ENGINEERS
INDIANAPOLIS, INDIANA • 46241

© COPYRIGHT, 1 WREN COMPANY

PARK FLETCHER • 5500 WEST BRADBURY AVENUE • INDIANAPOLIS, INDIANA

RENOVATION OF LIBERTY MIDDLE SCHOOL

ADDITION TO AND RENOVATION OF LIBERTY MIDDLE SCHOOL

JAMES W. ROBERTS REGISTERED 8581 STATE OF INDIANA PROFESSIONAL ENGINEER

PROJECT	DATE	REVISED
17519.00	MAY 3, 1982	

NO. E-11
OF 22

82-E-02