## INCANDESCENT FIXTURE SCHEDULE

| TYPE | MANUFACTURER'S CATALOG NUMBER | | MOUNT | LAMPS | REMARKS |
|---|---|---|---|---|---|
| K-1 | GUTH<br>MARCO | PS1-2410DF-4C732<br>LS616544-03-06 | RECESS | 1/70 | HIGH PRESSURE SODIUM LAMP WEATHERPROOF, TAMPERPROOF 277 VOLT BALLAST |
| K-2 | MARCO | B-101 | WALL | 2/60 | WITH WALNUT TRIM |
| K-3 | PASS & SEYMOUR | 44 | SURFACE | 1/150 | PORCELAIN WITH McGILL 2200 WIRE GUARD |
| K-4 | MARCO | S3-T357 | RECESS | 1/200 | WITH TOUCH LATCH FRAME |
| K-5 | INDY | 3212G | SURFACE | 2/20 | SINGLE FACE EXIT LIGHT ARROWS AS INDICATED ON DRAWINGS 277 VOLT BALLAST |
| K-6 | INDY | 3212G | SURFACE | 2/20 | DOUBLE FACE EXIT LIGHT ARROWS AS INDICATED ON DRAWINGS 277 VOLT BALLAST |
| K-7 | INDY | 3212G | WALL | 2/20 | SINGLE FACE EXIT LIGHT ARROWS AS INDICATED ON DRAWINGS 277 VOLT BALLAST |
| K-8 | DEVINE | B317-GB | WALL | 1/70 | HIGH PRESSURE SODIUM LAMP CAST GUARD 277 VOLT BALLAST |
| K-9 | DEVINE | B308-GB | WALL | 1/175 | METAL HALIDE LAMP CAST GUARD 277 VOLT BALLAST |
| K-10 | DEVINE | B300-GB | WALL | 1/200 | WIRE GUARD |
| K-11 | HOLOPHANE | 5413RP-277-H1A | RECESS | 1/400 | METAL HALIDE LAMP HIGH IMPACT ACRYLIC LENS 277 VOLT BALLAST |
| K-12 | QUALITY | 100-24A-1209-HPS-400 (2 @ 90°) | POLE | 2/400 | HIGH PRESSURE SODIUM LAMP 30'-0" SQUARE ALUMINUM POLE (COLOR TO BE SELECTED BY ARCHITECT) 277 VOLT BALLAST |

## MOTOR STARTER SCHEDULE

| MARK | ITEM | SPEED | NEMA SIZE | HP | AUXILIARY CONTACTS N. O. | AUXILIARY CONTACTS N. C. | ROOM NUMBER | CONTROL ENCL. | CONTROL REMOTE |
|---|---|---|---|---|---|---|---|---|---|
| MSA-1 | UTILITY EXHAUST FAN JA-1 | 1 | 0 | 3 | 1 | - | A-201 | SA | - |
| MSA-2 | UTILITY EXHAUST FAN JB-1 | 1 | 0 | 3/4 | 1 | - | A-201 | S | S |
| MSA-3 | UTILITY EXHAUST FAN JB-2 | 1 | 0 | 11/2 | 1 | - | A-201 | S | S |
| MSA-4 | UTILITY EXHAUST FAN JB-4 | 1 | 0 | 2 | 1 | - | A-201 | SA | - |
| MSA-5 | UTILITY EXHAUST FAN JB-10 | 1 | 0 | 3/4 | 1 | - | A-201 | SA | - |
| MSA-6 | UTILITY EXHAUST FAN JB-11 | 1 | 0 | 3/4 | 1 | - | A-201 | S | S |
| MSB-1 | UTILITY EXHAUST FAN JB-5 | 1 | 0 | 1 | 1 | - | B-111 | SA | - |
| MSB-2 | UTILITY EXHAUST FAN JB-6 | 1 | 0 | 3/4 | 1 | - | B-111 | S | S |
| MSB-3 | UTILITY EXHAUST FAN JB-7 | 1 | 0 | 3/4 | 1 | - | B-111 | S | S |
| MSB-4 | INCINERATOR | 1 | 0 | 1 | 1 | - | B-107 | S | - |
| MSB-5 | UTILITY EXHAUST FAN JB-3 | 1 | 0 | 11/2 | 1 | - | B-103 | S | S |

NOTES:
1. ALL MOTOR STARTERS SHALL BE 3-POLE COMBINATION TYPE WITH NEMA I ENCLOSURE UNLESS OTHERWISE NOTED.
2. ALL MOTOR STARTERS SHALL HAVE 480/120 VOLT CONTROL CIRCUIT TRANSFORMER WITH CONTROL CIRCUIT FUSES, UNLESS OTHERWISE NOTED.
3. ALL MOTOR STARTERS SHALL HAVE 120 VOLT COIL AND 480 VOLT CONTACTS, UNLESS OTHERWISE NOTED.
4. 120 VOLT MOMENTARY CONTACT PUSH BUTTON: P=ON-OFF, P2=HI-LOW, T=TEST BUTTON, T2=HI-LOW TEST BUTTON, PO2=HI-LOW OFF.
5. 120 VOLT MAINTAINED CONTACT SELECTOR SWITCH: S=ON-OFF, S2=HI-LOW, SO2=HI-LOW-OFF, SA=HAND-OFF-AUTOMATIC.
6. PILOT LIGHTS SHALL BE FURNISHED WITH ALL REMOTE CONTROL UNITS.

## AUTOMATIC EXHAUST FAN SCHEDULE

| NUMBER ZONE | EXHAUST FAN NUMBER | POWER CIRCUIT | CONTROL TYPE | CONTROLLED BY | CONTROL DEVICE LOCATION | CONTROL DEVICE CONTROL CIRCUIT |
|---|---|---|---|---|---|---|
| 1 | JA-1 | 2H1-6 | I | MSA-1 | A-201 | - |
| 2 | JB-4 | 2H1-5 | I | MSA-4 | A-201 | - |
| 4 | JB-10 | 2H1-1 | I | MSA-5 | A-201 | - |
| 6 | JB-5 | 1H1-5 | I | MSB-1 | B-111 | |

NOTES:
1. ALL CONTACTORS SHALL HAVE NEMA I ENCLOSURE WITH HAND-OFF-AUTOMATIC SELECTOR SWITCH AND FUSE PROTECTION FOR COIL CIRCUITS UNLESS OTHERWISE NOTED.
2. CONTACTORS SHALL BE ELECTRICALLY HELD.
3. CONTACTORS SHALL HAVE 120 VOLT COIL.
4. CONTACTORS SHALL HAVE NORMALLY OPEN CONTACTS.
5. CONTACTOR SHALL BE NEMA SIZE 0.
6. SEE TYPICAL AUTOMATIC EXHAUST FAN WIRING CONTROL DIAGRAM.

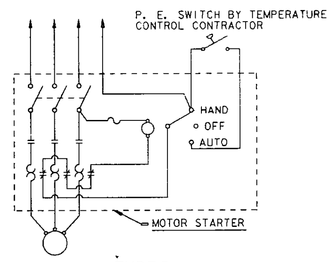


AUTOMATIC EXHAUST FAN CONTROL WIRING DIAGRAM
NO SCALE

## FLUORESCENT FIXTURE SCHEDULE

| TYPE | MANUFACTURER'S CATALOG NUMBER | | MOUNT | LAMPS | REMARKS |
|---|---|---|---|---|---|
| F-1 | DAYBRITE<br>GUTH<br>INDY | SG142-SRA6245<br>FS1-1424G-1HO2<br>512-TB-65B-142 | RECESS | 2/35 | FLANGELESS CHASSIS FRAMED HOLOPHANE 6245 LENS 277 VOLT BALLAST |
| F-2 | DAYBRITE<br>GUTH<br>INDY | SG224-SRA6245<br>FS1-2444G-1HO2<br>512-TB-65B-244 | RECESS | 4/35 | FLANGELESS CHASSIS FRAMED HOLOPHANE 6245 LENS 277 VOLT BALLAST |
| F-3 | DAYBRITE<br>WESTINGHOUSE | R41252-4<br>H24QRV | PENDENT | 2/35 | CHAIN PENDENT MOUNT 309 X 309 METAL LOUVERS 277 VOLT BALLAST |
| F-4 | GLOBE<br>GUTH | QYE-6951-4R<br>FS1-X414F-1HO2 | RECESS | 1/35 | FLANGED CHASSIS FRAMED HOLOPHANE 6245 LENS 277 VOLT BALLAST |
| F-5 | LITE CONTROL<br>MORRIS KURTZON | EW-2024RS-36T<br>V7872-4 | RECESS | 2/35 | 277 VOLT BALLAST |
| F-6 | DAYBRITE<br>GUTH<br>INDY | SG243-SRA6245<br>FS1-2444G-1HO2<br>512-TB-65B-244 | RECESS | 3/35 | FLANGELESS CHASSIS FRAMED HOLOPHANE 6245 LENS 277 VOLT BALLAST |

## RELAY SCHEDULE

| MARK & TYPE | ITEM | CONTROLLED CIRCUIT | COIL CIRCUIT | ROOM NUMBER | SEE NOTE(S) |
|---|---|---|---|---|---|
| RA-1 ASCO #5410C | BUILDING SECURITY LIGHTS | 1H3-24 | 1L5-24 (PHOTO-CELL) | A-137 | 1, 2, 3, 4, 6, 8 |
| RA-2 ASCO #5430C | PARKING LOT LIGHTS | 1H3-26, 28 | 1L5-22 | A-137 | 1, 2, 3, 5, 6, 8, 11 |
| RB-1 ASCO #16640C | MULTI-PURPOSE ROOM LIGHTS | 1H2-13, 15, 17, 19 | 1L3-20 | B-107 | 1, 2, 3, 5, 6, 9 |
| RB-2 ASCO #5410C | BUILDING SECURITY LIGHTS | 1H2-14 | 1L5-24 (PHOTO-CELL) | B-107 | 1, 2, 3, 4, 6, 8 |
| RB-3 ASCO #16640C | CAFETERIA LIGHTS (2) | 1H2-6, 8, 10, 12 | 1L3-22 | B-107 | 1, 2, 3, 5, 6, 9 |
| RB-4 ASCO #16640C | CAFETERIA LIGHTS (2) | 1H2-6, 8, 10, 12 | 1L3-22 | B-107 | 1, 2, 3, 5, 6, 9 |
| RB-5 ASCO #5411C | MULTI-PURPOSE ROOM EMERGENCY LIGHTS | 1XL1-1 | 1H2-16 | B-107 | 1, 2, 3, 4, 6, 7, 8, 10 |

NOTES:
1. FURNISH NEMA ENCLOSURE UNLESS OTHERWISED NOTED.
2. FURNISH FUSE PROTECTION FOR COIL CIRCUIT.
3. 120 VOLT COIL.
4. ELECTRICALLY HELD.
5. MECHANICALLY HELD.
6. CONTACTS-NORMALLY OPEN.
7. CONTACTS-NORMALLY CLOSED.
8. PROVIDE HAND-OFF-AUTOMATIC SELECTOR SWITCH IN RELAY ENCLOSURES.
9. PROVIDE ON-OFF SELECTOR SWITCH IN RELAY ENCLOSURE.
10. 277 VOLT COIL.
11. RELAY SHALL BE CONTROLLED BY JC-85/40.

## FLOOR OUTLET SCHEDULE

| TYPE | DESCRIPTION | | REMARKS |
|---|---|---|---|
| A | LEW | 6325B-DFB-NS | WITH DUPLEX RECEPTACLE |
| B | LEW | 5325B-BE-NS | WITH TELEPHONE JACK ADAPTER |
| C | LEW | 5325B-BE-NS | WITH MICROPHONE JACK |

NOTES:
1. VERIFY EXACT LOCATION OF ALL FLOOR OUTLETS WITH ARCHITECTS.
2. FURNISH AND INSTALL LEW DCF-1-NS CARPET FLANGES WHERE REQUIRED.

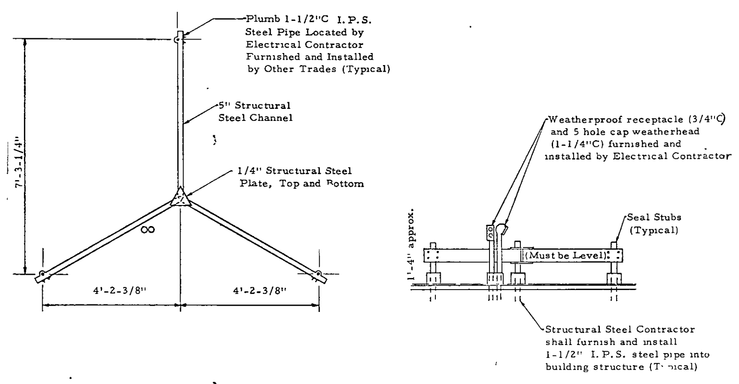


TOWER BASE DETAIL
No Scale

NOTES:
1. Rohn-Spaulding Tower Base furnished by Electronics Contractor and installed by Electrical Contractor.
2. Antennae Tower furnished and installed by Electronics Contractor.

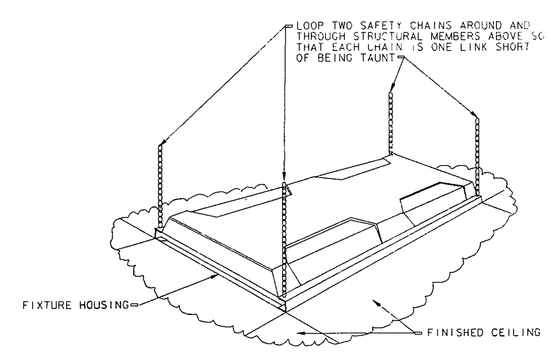


RECESSED FLUORESCENT FIXTURE MOUNTING DETAIL
NO SCALE

## ELECTRICAL SYMBOL SCHEDULE

| SYMBOL | DESCRIPTION | SYMBOL | DESCRIPTION |
|---|---|---|---|
| F-3 | FLUORESCENT LIGHT FIXTURE F-3 INDICATES FIXTURE TYPE | | ELECTRICAL PANELBOARD |
| | FLUORESCENT LIGHT FIXTURE (EMERGENCY/WALK THRU/ SECURITY) F-3 INDICATES FIXTURE TYPE | H-J | JUNCTION BOX-WALL MOUNTED-ALLOW 4'-0" OF WIRE FOR CONNECTION |
| K-3 | INCANDESCENT/HIGH INTENSITY DISCHARGE LIGHT FIXTURE K-3 INDICATES FIXTURE TYPE | J | JUNCTION BOX-CEILING MOUNTED-ALLOW 4'-0" OF WIRE FOR CONNECTION |
| K-3 | INCANDESCENT/HIGH INTENSITY DISCHARGE LIGHT FIXTURE (EMERGENCY/WALK THRU/SECURITY) K-3 INDICATES FIXTURE TYPE | | CONDUIT STUB UP-COUPLING FLUSH WITH FINISHED FLOOR-SEE DETAIL |
| | EXIT LIGHT FIXTURE-CEILING MOUNTED-BAR INDICATES FACE | M | MOTOR |
| | EXIT LIGHT FIXTURE-CEILING MOUNTED-ARROW INDICATES FACE WITH DIRECTIONAL ARROW | SC | SPEAKER-SC INDICATES UNLIFTED CIRCUIT FROM MAIN SOUND CONSOLE |
| | EXIT LIGHT FIXTURE-WALL MOUNTED-BAR INDICATES FACE | | LOUD SPEAKER-WALL MOUNTED |
| | EXIT LIGHT FIXTURE-WALL MOUNTED-ARROW INDICATES FACE WITH DIRECTIONAL ARROW | | HORN OR PROJECTOR SPEAKER |
| D | WALL DIMMER | S | SPEAKER-CEILING MOUNTED-RECESSED |
| | 20 AMPERE RATED 120/277 VOLT SINGLE POLE SWITCH | | PUSH TO CALL SWITCH |
| 2 | 20 AMPERE RATED 120/277 VOLT TWO POLE SWITCH | | MICROPHONE JACK |
| 3 | 20 AMPERE RATED 120/277 VOLT THREE WAY SWITCH | | MICROPHONE FLOOR BOX-T-INDICATES TYPE-SEE FLOOR BOX SCHEDULE |
| 4 | 20 AMPERE RATED 120/277 VOLT FOUR WAY SWITCH | V | VOLUME CONTROL |
| M | 20 AMPERE RATED 120/277 VOLT MOMENTARY SWITCH | | SPEAKER JACK (UNLIFTED) |
| K | KEY OPERATED SWITCH | | SPEAKER JACK (LIFTED) |
| P | SWITCH WITH PILOT LIGHT | | BRIDGING JACK-600 OHMS |
| T P | MANUAL MOTOR STARTER WITH THERMAL OVERLOADS AND PILOT LIGHTS | | SOUND TERMINAL CABINET |
| | COMBINATION MOTOR STARTER | F | FIRE ALARM MANUAL STATION |
| | MAGNETIC MOTOR STARTER | | FIRE ALARM HORN AND VISUAL FIRE ALARM SIGNAL LIGHT |
| R | NONFUSED SAFETY SWITCH-R-INDICATES AMPERE RATING | F | FIRE ALARM MANUAL STATION WITH HORN AND VISUAL FIRE ALARM SIGNAL LIGHT LOCATED ABOVE |
| P | ON-OFF PUSH BUTTON OR SELECTOR SWITCH-P- INDICATES PILOT LIGHT | F A | FIRE DETECTOR (THERMAL) -AREA-R- INDICATES TEMPERATURE SETTING |
| P | HIGH-LOW-OFF PUSH BUTTON OR SELECTOR SWITCH-P-INDICATES PILOT LIGHT | F D | FIRE DETECTOR (THERMAL) -DUCT- FURNISHED AND INSTALLED BY OTHERS |
| | 20 AMPERE RATED 3 WIRE 120 VOLT DUPLEX RECEPTACLE WITH GROUND | F A | FIRE DETECTOR (SMOKE) -AREA-R- INDICATES TEMPERATURE SETTING |
| | 15 AMPERE RATED 3 WIRE 120 VOLT DUPLEX RECEPTACLE WITH GROUND | F D | FIRE DETECTOR (SMOKE) -DUCT-FURNISHED AND INSTALLED BY OTHERS |
| | 15 AMPERE RATED 3 WIRE 120 VOLT DUPLEX RECEPTACLE WITH GROUND-HORIZONTAL MOUNTED | | FIRE ALARM FLOW SWITCH |
| | 15 AMP RATED 3 WIRE 120 VOLT DUPLEX RECEPTACLE WITH GROUND FURNISHED BY OTHERS, INSTALLED AND WIRED COMPLETE BY ELECTRICAL CONTRACTOR | DH | DOOR HOLDER-FURNISHED AND INSTALLED BY OTHERS, WIRED COMPLETE BY ELECTRICAL CONTRACTOR |
| WC | 15 AMPERE RATED 3 WIRE 120 VOLT DUPLEX RECEPTACLE CONCEALED BEHIND WATER COOLER-VERIFY EXACT HEIGHT AND LOCATION | | SPRINKLER ZONE CONTROL VALVE |
| | 15 AMPERE RATED 5 WIRE SPLIT WIRED 120 VOLT DUPLEX RECEPTACLE WITH GROUND (CONSTANT AND CONTROLLED) | M | CABINET HEATER/CLASSROOM UNIT VENTILATOR/FAN COIL/UNIT HEATER FURNISHED AND INSTALLED BY OTHERS; WIRED COMPLETE BY ELECTRICAL CONTRACTOR |
| R | 120/250 VOLT RATED 3 WIRE RECEPTACLE-R-INDICATES AMPERE RATING | CH | CABINET HEATER |
| N R | 250 VOLT RATED RECEPTACLE-N-INDICATES NUMBER OF POLES-R-INDICATES AMPERE RATING | CUV | CLASSROOM UNIT VENTILATOR |
| | SPECIAL RECEPTACLE-SEE FLOOR PLANS | FC | FAN COIL |
| T | FLOOR BOX-T-INDICATES TYPE-SEE FLOOR BOX SCHEDULE | UH | UNIT HEATER |
| T | TELEPHONE FLOOR BOX-T-INDICATES TYPE-SEE FLOOR BOX SCHEDULE | REF | ROOF EXHAUST FAN |
| | TELEPHONE RECEPTACLE | AHU | AIR HANDLING UNIT |
| | TELEPHONE TERMINAL BOARD | WP | WEATHERPROOF-SEE SPECIFICATIONS |
| T | TELEVISION TAP OFF IN TWO GANG BOX WITH 15 AMPERE RATED 3 WIRE 120 VOLT DUPLEX RECEPTACLE WITH GROUND-SEE DETAIL | EP | EXPLOSION PROOF-SEE SPECIFICATIONS |
| T | TELEVISION INPUT JACK IN TWO GANG BOX | VP | VANDAL PROOF-SEE SPECIFICATIONS |
| C | CLOCK-SINGLE FACE-SEE SPECIFICATIONS | GFI | GROUND FAULT INTERRUPTER-ALL ELECTRICAL DEVICES ON CIRCUIT WHERE G.F.I. IS SHOWN SHALL BE GROUND FAULT PROTECTED (SEE SPECIFICATIONS |
| C C | CLOCK-DOUBLE FACE-SEE SPECIFICATIONS | SFS | SPRINKLER FLOW SWITCH |
| | BELL-CLASSROOM/CORRIDOR UNLESS OTHERWISE NOTED | SZCV | SPRINKLER ZONE CONTROL VALVE |
| | | TCP | TEMPERATURE CONTROL PANEL |

NOTE: NOT ALL SYMBOLS ARE USED ON THIS PROJECT.

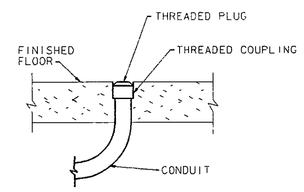


CONDUIT STUB UP DETAIL
NO SCALE
+ = STUB UP SYMBOL

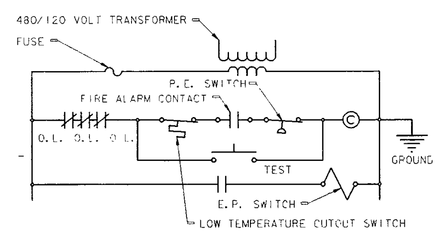


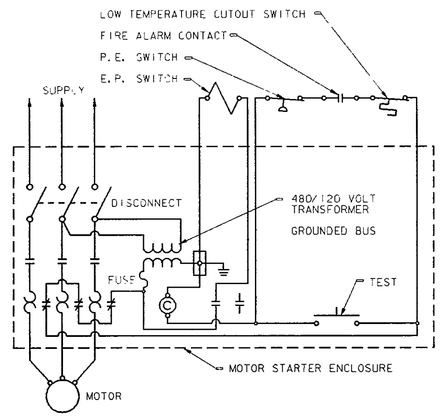


SINGLE SPEED AIR HANDLING UNIT WIRING DIAGRAM
NO SCALE

### GENERAL NOTES-APPLY TO ALL SHEETS

1. VERIFY ALL DIMENSIONS FROM ARCHITECTURAL PLANS.
2. DIMENSIONS SHOWN ON OUTLET BOXES SHALL BE FROM THE FINISHED FLOOR TO THE TOP OF THE BOX.
3. THE ELECTRICAL CONTRACTOR SHALL CENTER CLOCKS ABOVE DOORS, CHALKBOARDS OR IN WALL SPACES ALIGNED WITH CEILING GRID AS DIRECTED BY THE ARCHITECT.
4. CONDUIT TO LIGHTS IS SHOWN TO INDICATE SWITCHING AND DOES NOT INDICATE QUANTITY OR EXACT LOCATION. OTHER CONDUIT SHOWN INDICATES CONNECTION, BUT DOES NOT INDICATE QUANTITY OR EXACT LOCATION.
5. FLUORESCENT FIXTURES SHALL BE SUPPORTED FROM STRUCTURE ABOVE-SEE DETAIL THIS SHEET.
6. FLUORESCENT FIXTURES INSTALLED IN ACOUSTICAL TILE SHALL BE ON ONE FOOT MODULES.
7. ALL FLUORESCENT FIXTURES MOUNTED INDEPENDENTLY SHALL BE FURNISHED WITH TWO END PLATES. FLUORESCENT FIXTURES MOUNTED IN A CONTINUOUS ROW SHALL BE FURNISHED WITH PROPER NUMBER OF CONNECTORS. END PLATES SHALL BE FURNISHED AT THE ENDS OF EACH ROW ONLY.
8. PLASTER FRAMES AND/OR RINGS SHALL BE PROVIDED WHERE REQUIRED BY CEILING CONSTRUCTION.
9. VERIFY LOCATION OF LIGHTS IN ROOMS CONTAINING EXPOSED DUCTWORK AND PIPING BY OTHER TRADES AND RELOCATE, IF NECESSARY, AS DIRECTED BY ARCHITECT.
10. VERIFY LOCATION OF MOTOR STARTERS, DISCONNECTS, PANELBOARDS, ETC., IN ROOMS CONTAINING EXPOSED DUCTWORK AND PIPING BY OTHER TRADES AND RELOCATE TO AN ADJACENT, UNOBSTRUCTED AREA AS DIRECTED BY ARCHITECT.
11. VERIFY HEIGHT AND LOCATION OF OUTLETS BEHIND WATER COOLERS WITH OTHER TRADES, SO THAT OUTLETS ARE CONCEALED.
12. SEE MECHANICAL PLANS FOR EXHAUST FAN SCHEDULE AND POWER CIRCUITS.
13. ALL FREE STANDING ITEMS OF ELECTRICAL EQUIPMENT SHALL BE INSTALLED ON FOUR INCH (4") CONCRETE PADS BY ELECTRICAL CONTRACTOR UNLESS NOTED TO BE FURNISHED BY OTHER TRADES.
14. VERIFY EXACT LOCATION OF ALL OUTLETS IN LABORATORY EQUIPMENT, AND BUILT-IN FURNITURE WITH EQUIPMENT SUPPLIERS ROUGH-IN DRAWINGS BEFORE ROUGHING IN.


EVERETT I. BROWN COMPANY
ARCHITECTS ENGINEERS
• PARK FLETCHER • INDIANAPOLIS, INDIANA • 46241


© EVERETT I. BROWN COMPANY

EVERETT I. BROWN
5500 WEST BRADBURY AVENUE • INDIANAPOLIS, INDIANA
JACKSON ELEMENTARY SCHOOL

James W. Roberts
REGISTERED ARCHITECT
JAMES W. ROBERTS
8583
STATE OF INDIANA
PROFESSIONAL ENGINEER

| PROJECT | DATE | REVISED |
|---|---|---|
| 12031.00 | MAY 3, 1982 | |

NO. E-3
OF 22

82-8-01