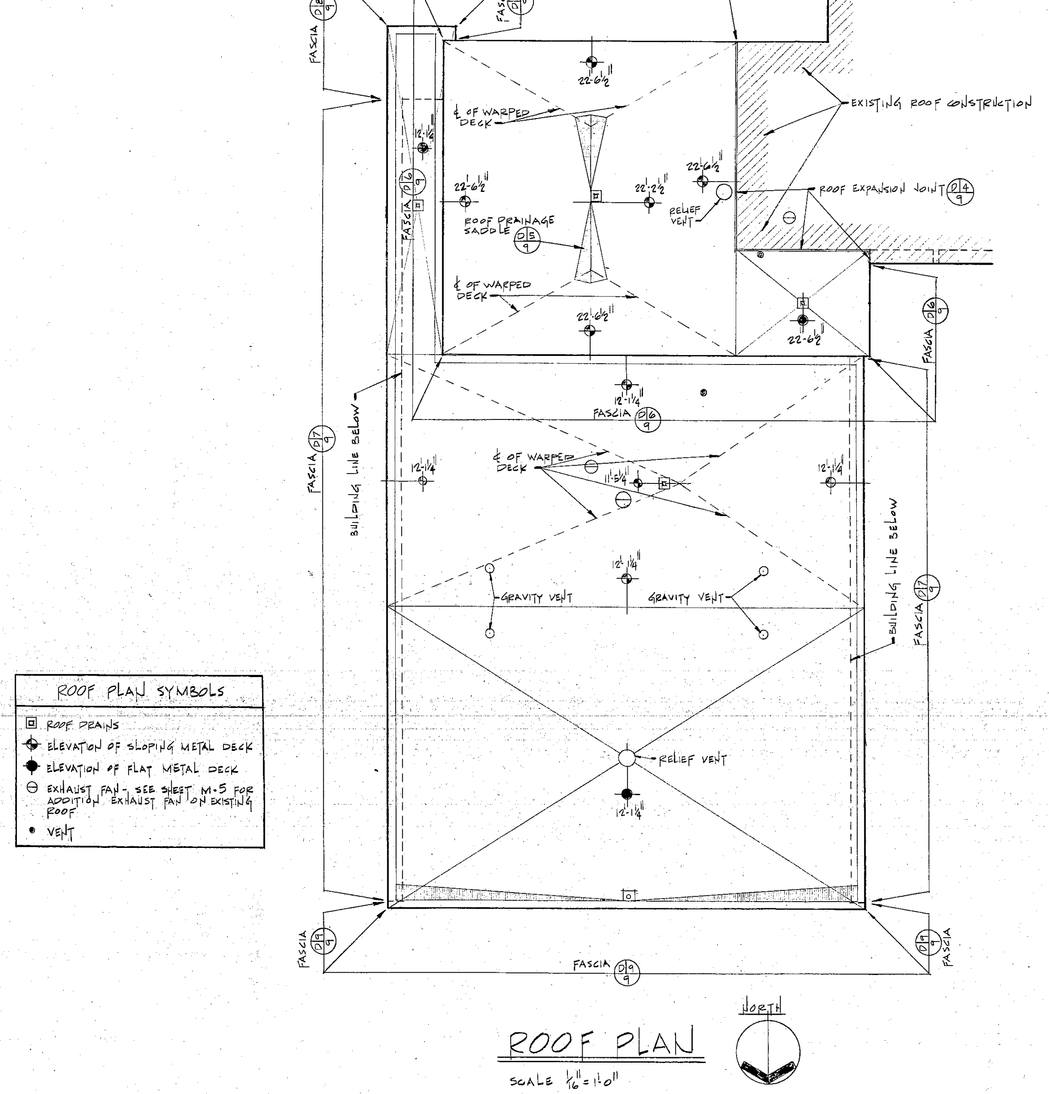

ROOF PLAN

SCALE 1/16" = 1'-0"

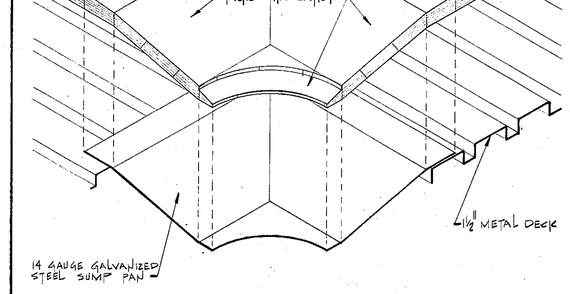

QUARTER ISOMETRIC OF ROOF DRAIN SUMP PAN AND INSULATION

SCALE 1½" = 1'-0"

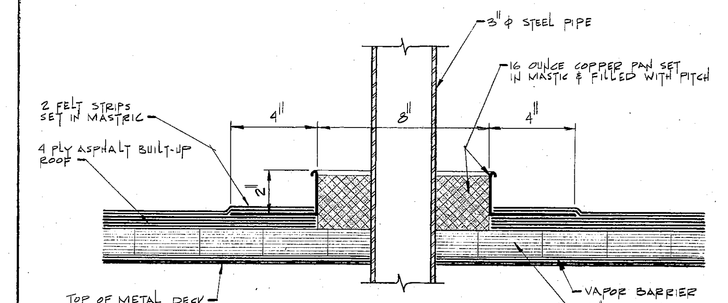

PITCH POCKET DETAIL

SCALE 3" = 1'-0"

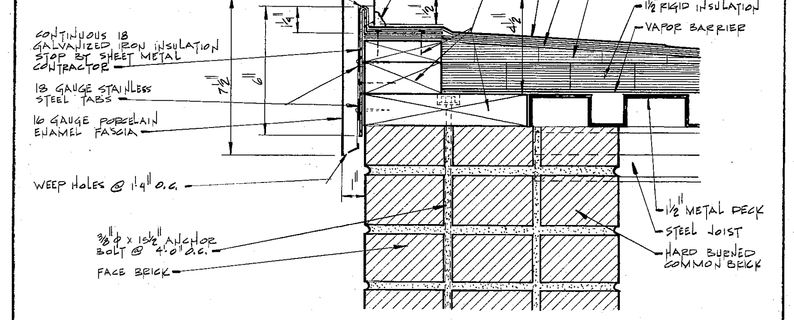

PORCELAIN ENAMEL FASCIA DETAIL

SCALE 3" = 1'-0"

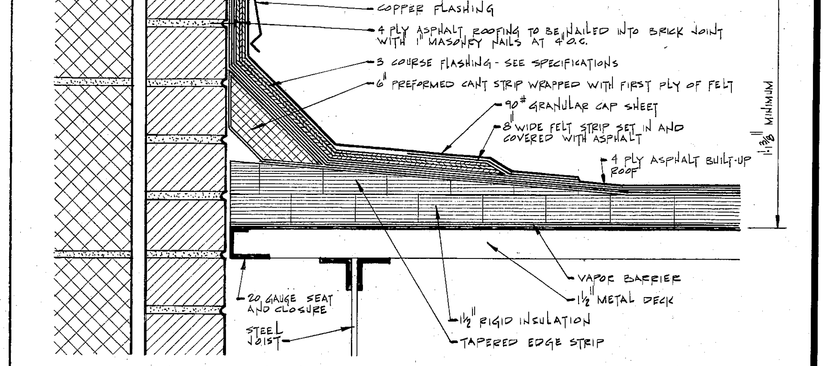

FLASHING DETAIL

SCALE 3" = 1'-0"

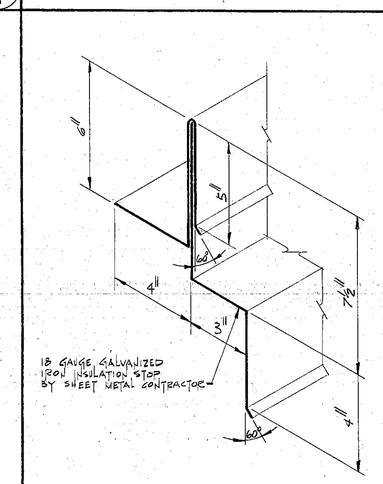

INSULATION STOP

SCALE 3" = 1'-0"

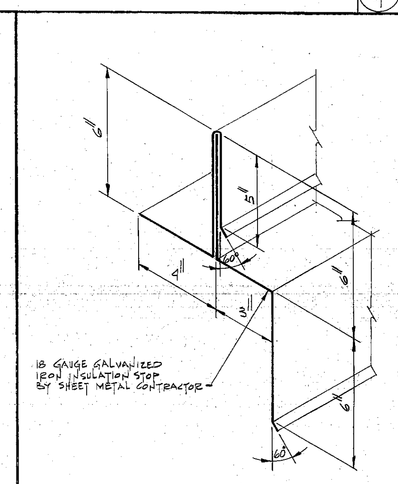

INSULATION STOP

SCALE 8" = 1'-0"

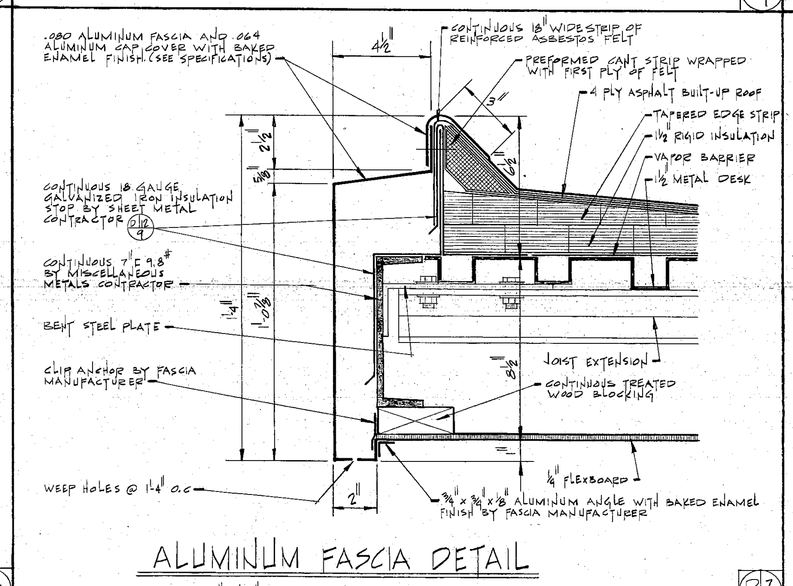

ALUMINUM FASCIA DETAIL

SCALE 3" = 1'-0"

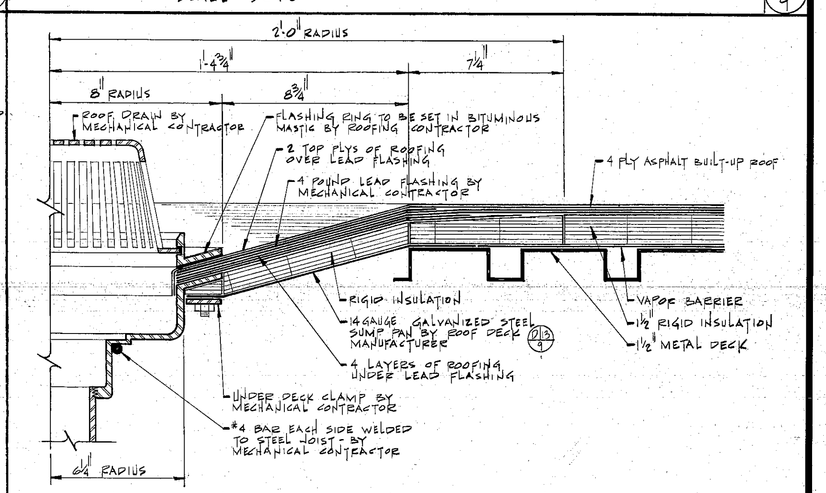

ROOF DRAIN AND SUMP PAN DETAIL

SCALE 3" = 1'-0"

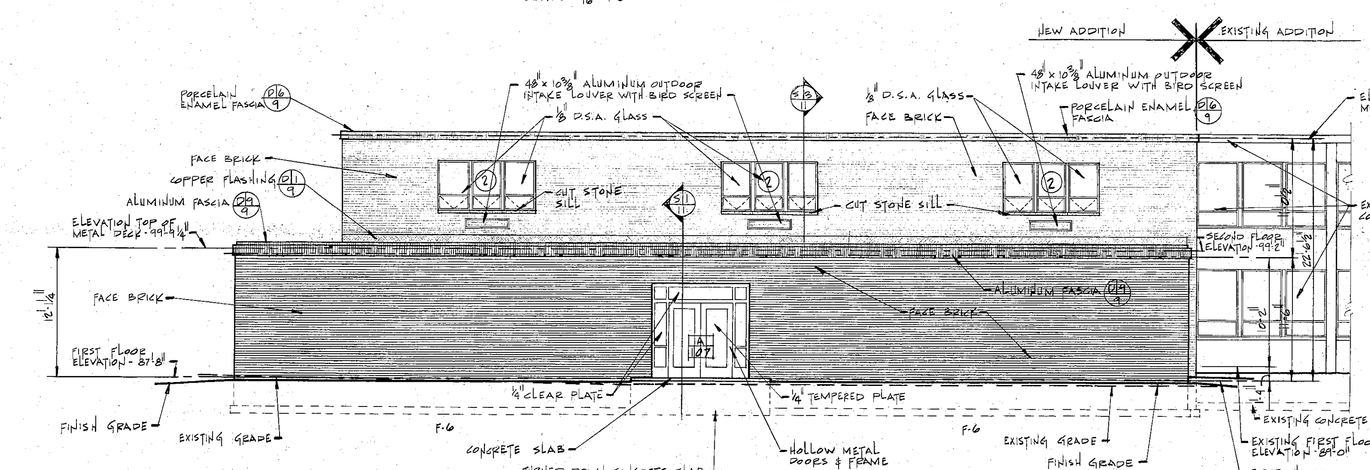

ELEVATION № 3

SCALE ⅛" = 1'-0"

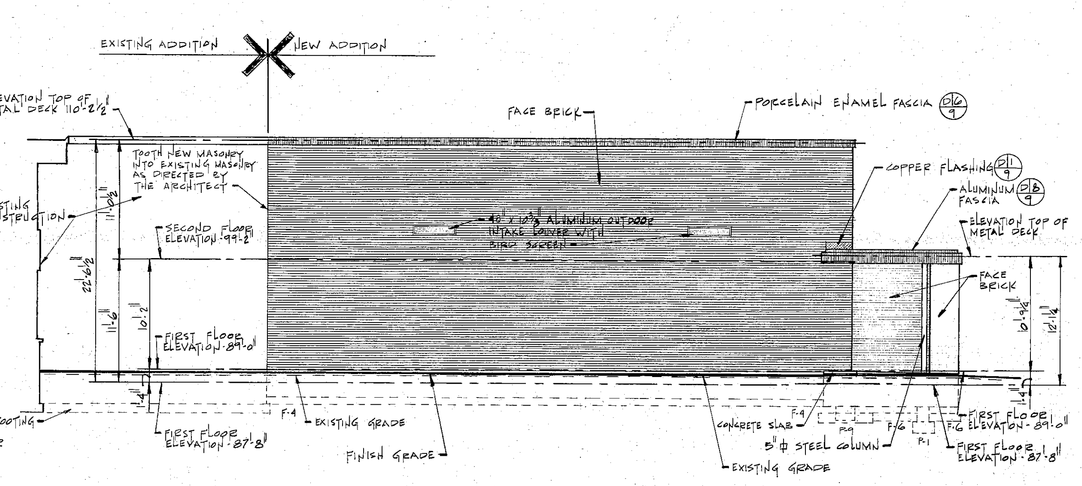

ELEVATION № 4

SCALE ⅛" = 1'-0"

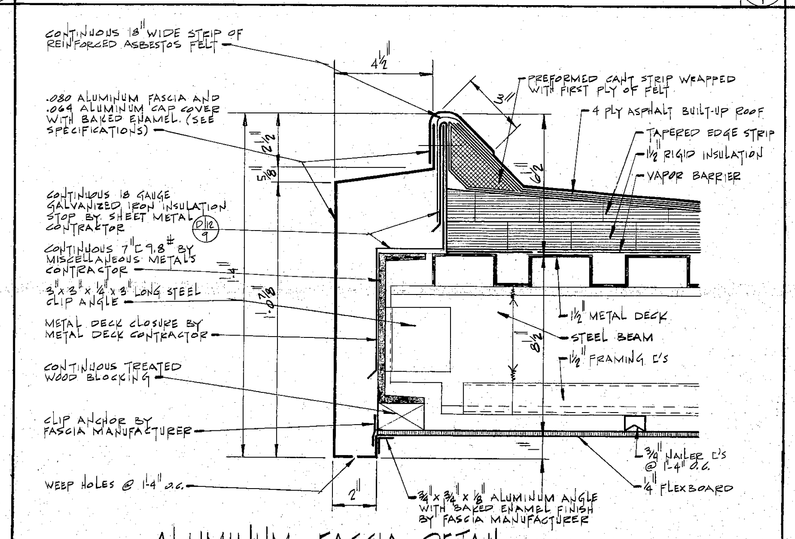

ALUMINUM FASCIA DETAIL

SCALE 3" = 1'-0"

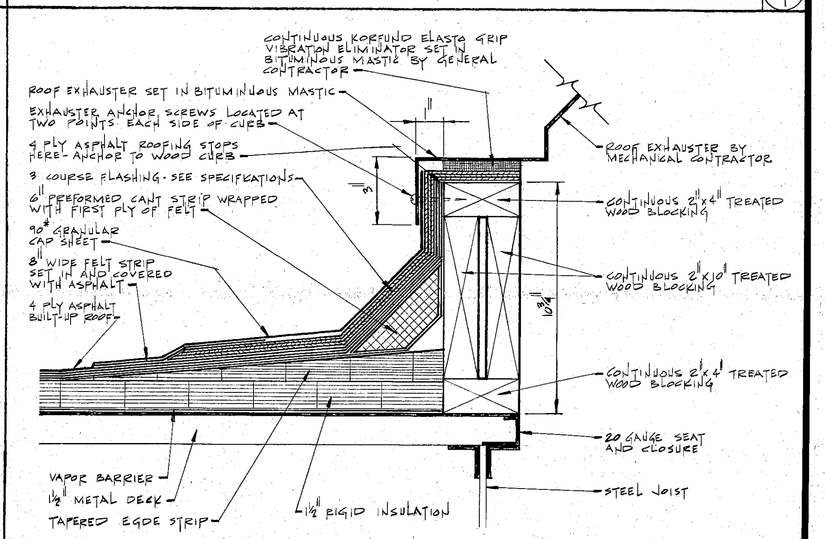

EXHAUSTER CURB DETAIL

SCALE 3" = 1'-0"

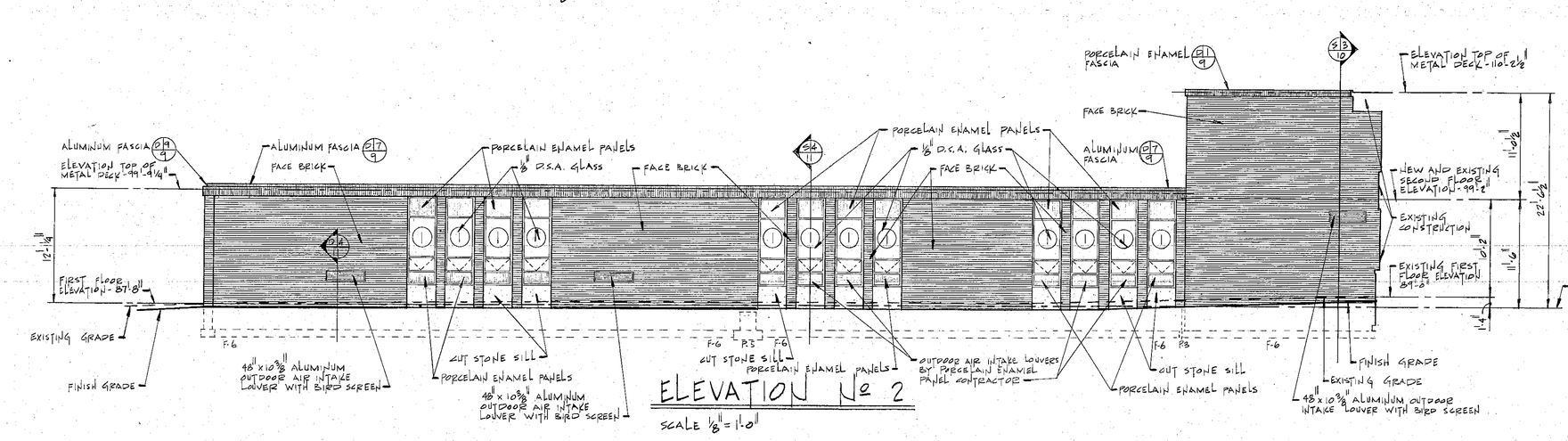

ELEVATION № 2

SCALE ⅛" = 1'-0"

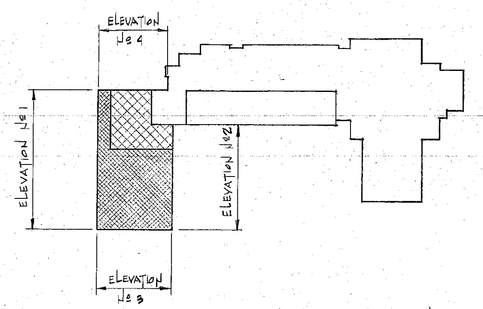

ELEVATION KEY PLAN

NO SCALE

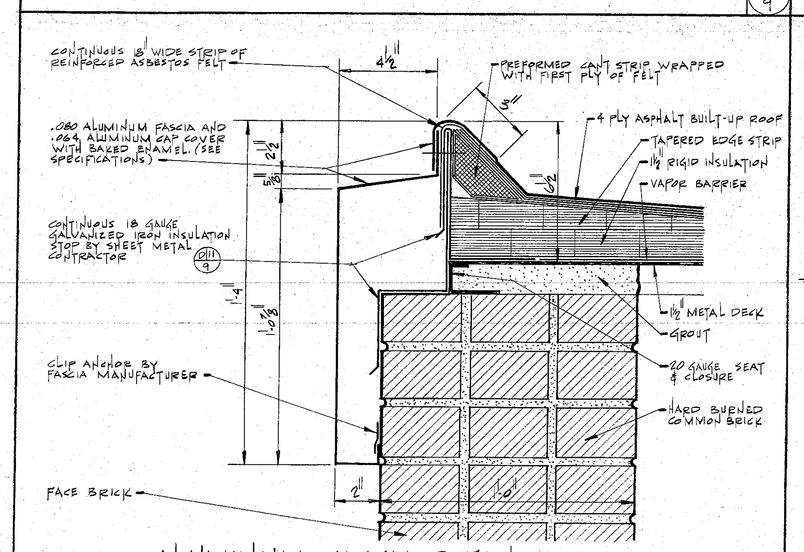

ALUMINUM FASCIA DETAIL

SCALE 3" = 1'-0"

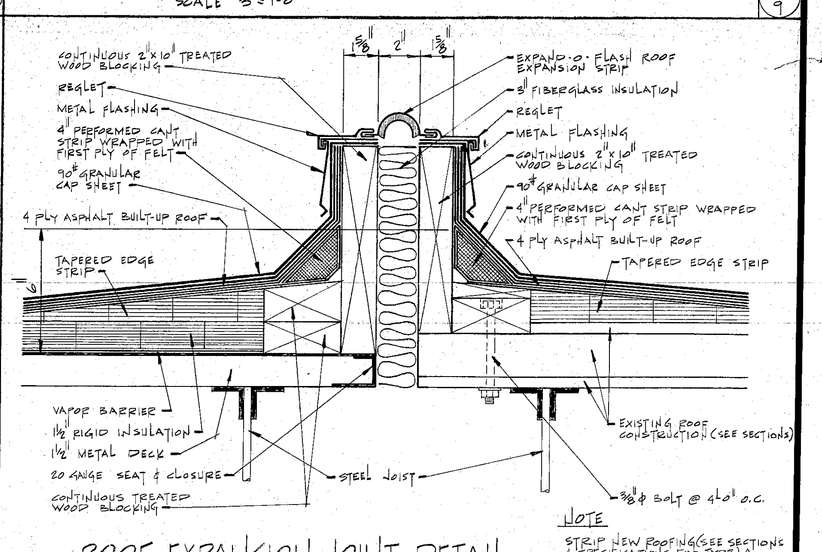

ROOF EXPANSION JOINT DETAIL

SCALE 3" = 1'-0"

NOTE
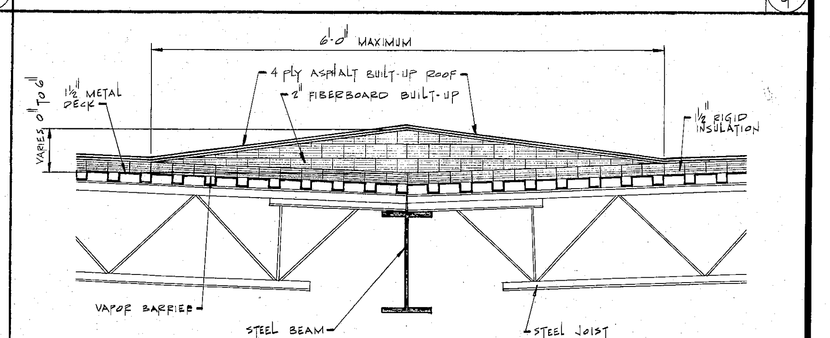
STRIP (NEW ROOFING SEE SECTIONS & SPECIFICATIONS FOR TYPE) MINIMUM OF 4'-0" INTO EXISTING ROOFING.