WALK-IN COMPRESSOR & EVAPORATOR SCHEDULE

EVAPORATOR DATA									CONDENSING UNIT DATA							K.T. SYSTEM MODEL NO.
ROOM	ROOM TEMP	R-12 CHG.	HP	RPM	CFM	MODEL	CAP'Y @ 10°TD	FAN	HP	ELEC. CHAR.	CYL	REC. CAP'Y	CAP'Y @ ST	ST	MODEL	
FREEZER	-10°	6	1/15	1050	1140	TV126	7900	16"	2	208-3-60	2	19.7	8500	+20°	C2LW	C2LW126 *
COOLER	35°	2.1	1/15	1050	1200	C110	5500	14"	3/4	208-3-60	2	19.7	6700	+25°	C3/4FXW	C3/4FXW110

* HOT GAS DEFROST

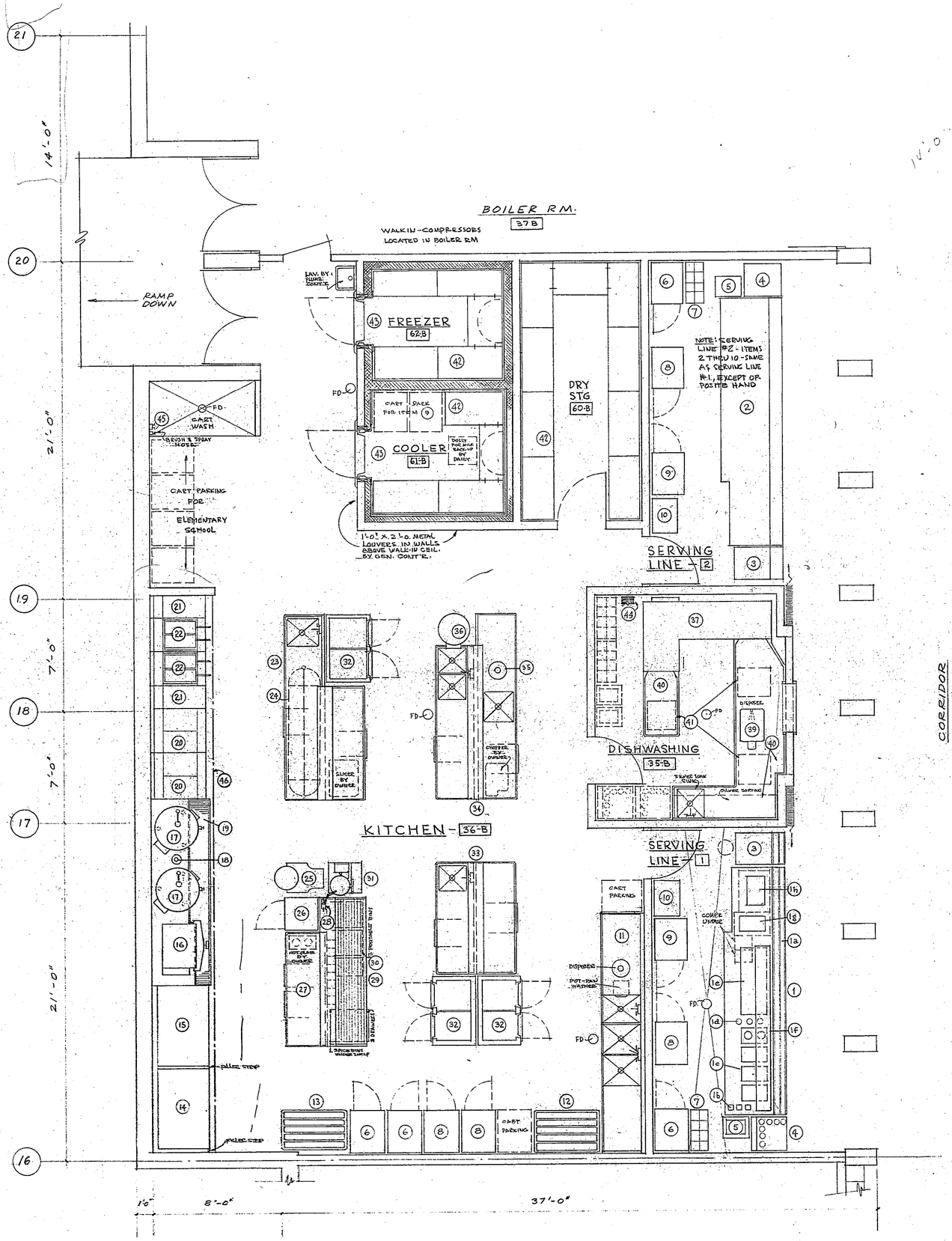

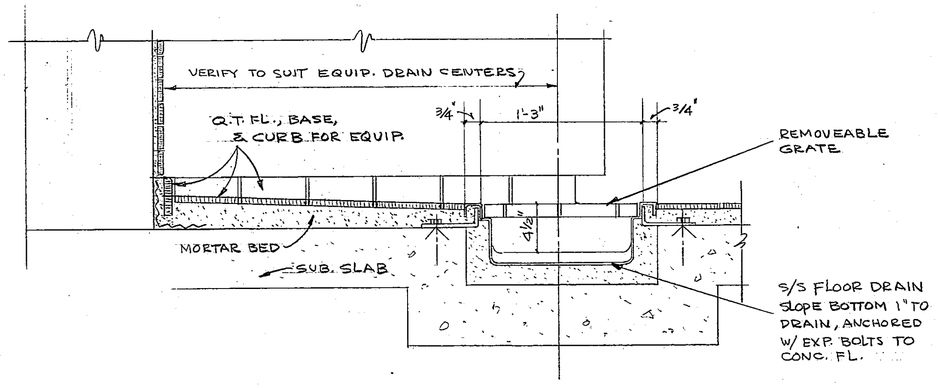

DRAIN TROUGH & GRATE DETAIL

SCALE: 1½" = 1'-0"

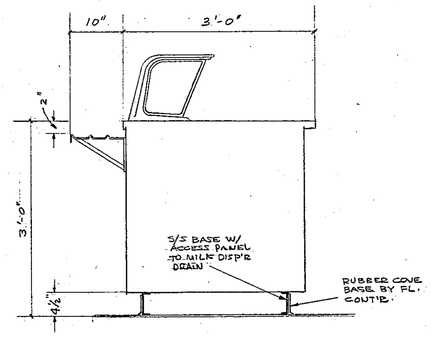

SECTIONAL DETAIL SERVING COUNTER BASE

SCALE: 3/4" = 1'-0"

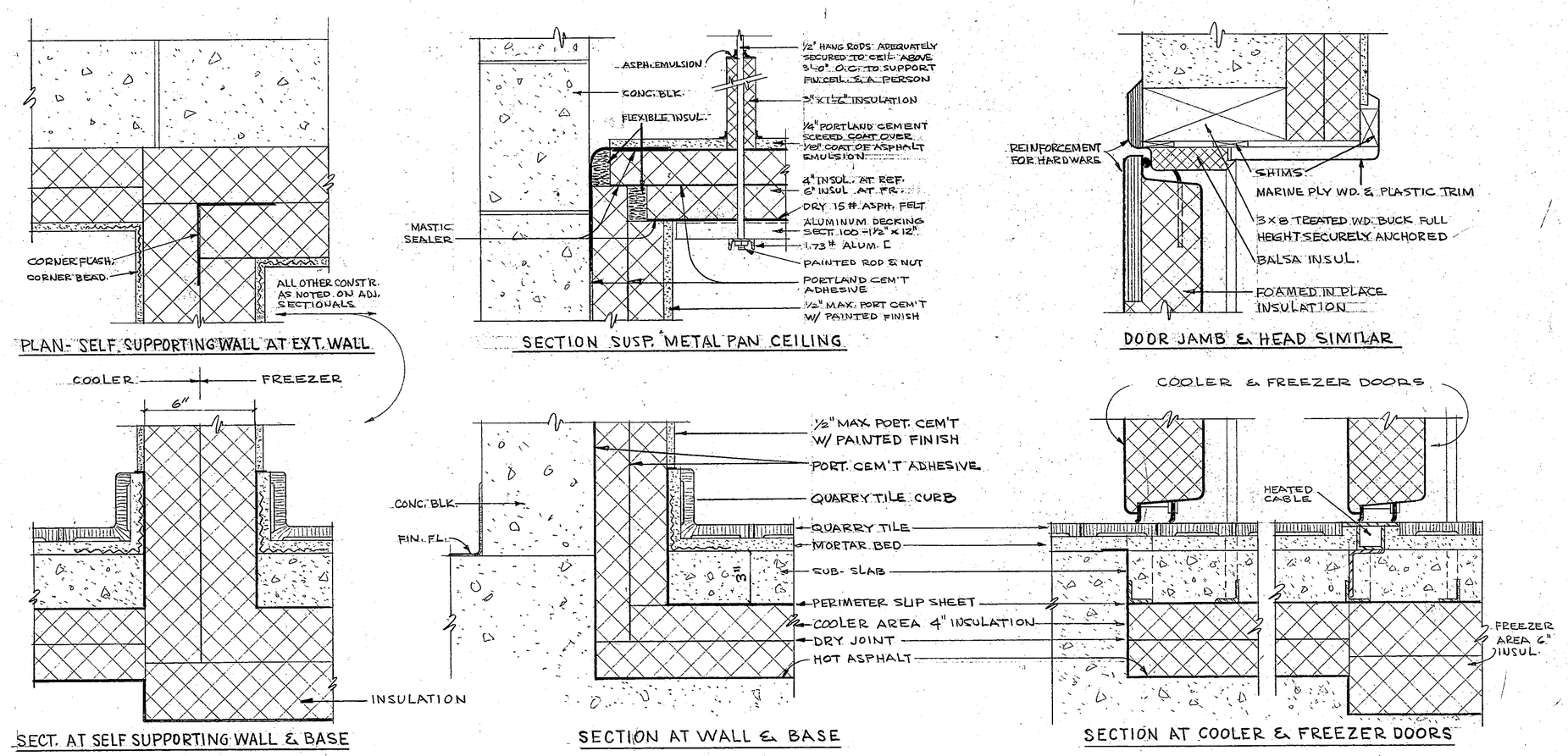

WALK-IN COOLER & FREEZER DETAILS

SCALE: 3" = 1'-0"

NO	PRINTS & DISTRIBUTION	BY	DATE
5	Lodge	RJ	6/21
6	Office	RJ	6/21
30	Bid Purposes	RJ	6/21
1	BOD CORP. APPROVAL	JJC	11-8-65
1	MR. NELSON'S REVIEW	JJC	11-15
11	8-BC, 2-STEDM, 1-PRW	JJC	11-16

NO	REVISIONS-THRU	BY	DATE

WESTCHESTER TOWNSHIP JUNIOR HIGH SCHOOL

FIFTH STREET
CHESTERTON INDIANA

FOR THE
WESTCHESTER TOWNSHIP SCHOOL BUILDING CORP.

KITCHEN & DISHWASHING EQUIPMENT

THE Perkins & Will PARTNERSHIP
ARCHITECTS
309 West Jackson Blvd
Chicago, Illinois 60606
Phone: 312-427-9300

EQUIPMENT

DATE 6-21-65
PROJECT NO. 21900-3
DRAWN BY WGOETZE
CHECKED BY W.S.G.
DEPT. HEAD TURSMAN
PROJ. ARCH. BENDIEK

Q1

65-8-01